CLEAR THE AIR: ROUTER TABLE DUST COLLECTION

SIMPLE SOLUTIONS FOR EVERYDAY CLAMPING CHALLENGES

TEMPLATE ROUTING: PERFECT RESULTS EVERY TIME

Woodsmith®

Woodsmith.com

Vol. 32 / No. 187

CLASSIC TOOL CABINET

- TAMBOUR DOOR
- SOLID-OAK CONSTRUCTION
- CUSTOM TOOL HOLDERS

A Publication of August Home Publishing

Table of Contents

from our readers
Tips & Techniques 4

all about
Shop Clamps 8
Tackling difficult clamping situations is simply a matter of having the right clamp for the job.

tools of the trade
Router Table Dust Collection 10
Clear the air with one of these simple dust collection strategies for your router table.

jigs & fixtures
Precision Honing Guides. 12
We compare the features of ten different honing guides to see what each has to offer.

techniques from our shop
Raised Panels on the Table Saw . . .16
Learn a new technique for creating coved raised panels using only a table saw.

tips from our shop
Shop Notebook 30

woodworking technique
Making Tambour Doors. 41
Making a tambour door isn't as complicated as it may seem. Here's a step-by-step approach.

working with tools
Template Routing. 44
The secret to routing accurate curved grooves is a guide bushing and a shop-made template.

finishing room
Fast Finish 46
This easy-to-use finishing method is quick, looks great, and protects your projects.

details of craftsmanship
Working with Figured Woods 48
Figured woods can make your projects stand out. Here are some tips for top-notch results.

in the mailbox
Q & A 50

hardware and supplies
Sources 51

Trivet Centerpiece page 20

Two-Tier Storage Bench page 22

projects

weekend project

Mail Organizer 18

Here's a simple organizer that can be built in a day, doesn't require much in the way of materials, and can be put to use right away.

weekend project

Trivet Centerpiece 20

Contrasting woods, a stylish design, and fine craftsmanship combine to make this trivet centerpiece as attractive as it is practical.

designer series project

Two-Tier Storage Bench 22

This unique bench offers convenient storage as well as a place to sit down. Straightforward construction makes it a snap to build.

shop project

Woodsmith GO ONLINE EXTRAS

Tambour Tool Cabinet 32

Your favorite hand tools deserve a home that's equally special. The tambour door really makes this tool cabinet stand out from the pack.

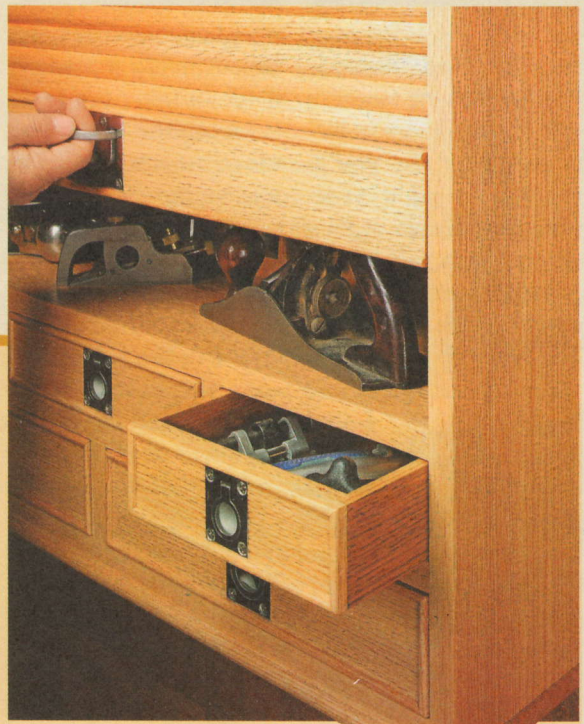

Tool Cabinet page 32

editor's note

Sawdust

The feature project in this issue of *Woodsmith* is one that I've wanted to build for quite some time. As you can see from the photo on the cover, it's a tool cabinet. But what sets this particular cabinet apart from most others is the tambour door. The reason I like this design is that when the door is opened, it's completely out of the way, hidden inside the case. And when it's closed, it's very effective at keeping out dust (as well as prying eyes).

We've featured projects with tambours before, so I didn't really anticipate any problems with this one. But when Steve (one of our shop craftsmen) asked me to stop by the shop to "try out" the door before he went any further with the project, I didn't have a good feeling. The door lifted up smoothly. But as I started to lower it, the weight of the tambour caused it to fly out of my hand and slam closed with a heavy thud. I couldn't help thinking about what would have happened if my fingers (or worse yet, one of my favorite hand planes) had been under that door.

Since most of the other people who tried out the door had a similar experience, we all got together to brainstorm some possible solutions. We kicked around several ideas for slowing down the door so it closed more gently — springs, catches, pulleys, weights — even shop-made braking "ramps."

In the end, the solution we settled upon turned out to be one of the least complicated. We simply added to the length of the tambour. The extra weight of those few additional tambour slats helps to counterbalance the door as you close it. So instead of falling heavily, it rolls down in a smooth, controlled manner.

The point I'm trying to make here is that sometimes when a problem seems almost insurmountable, the solution may actually be right in front of us.

Terry

Woodsmith GO ONLINE EXTRAS

This symbol lets you know there's more information and bonus material online at Woodsmith.com.

Tips & Techniques

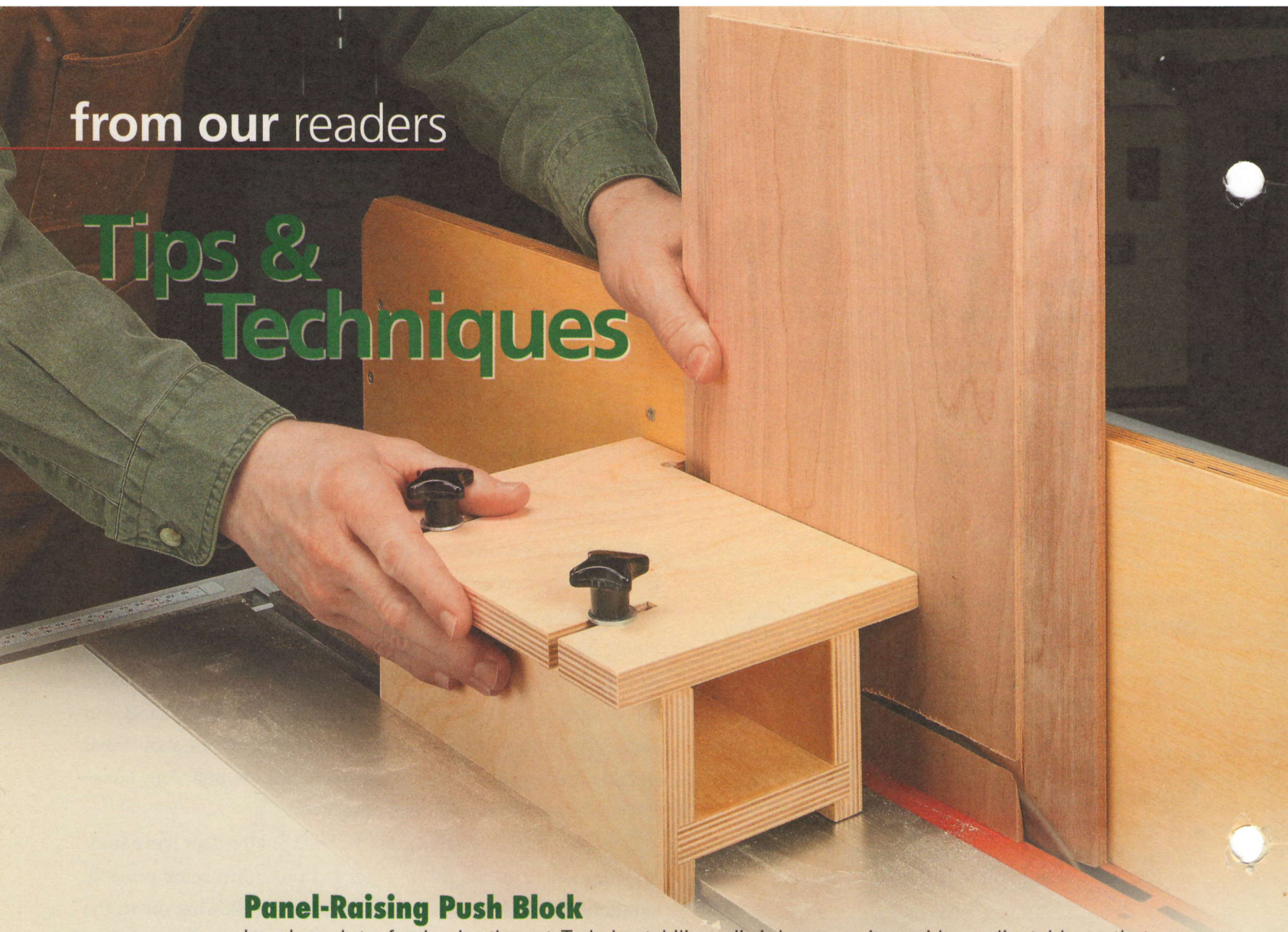

Panel-Raising Push Block

I make a lot of raised panels on the table saw. But it can be a challenge keeping the panel upright as you make the cut. To help stabilize the panel, I made this tall push block.

As you can see in the photo, the jig holds the panel snug against a tall auxiliary fence. A notch at the back of the top pushes the panel through the blade. The outside leg of the jig is longer so it can ride in a miter slot in the saw table. This keeps the block aligned with the fence.

If you take a look at the drawing below, you'll see that the jig is made from four pieces of plywood. Each leg has a groove to hold the brace, as shown in detail 'a.' The top of the jig is adjustable so that panels of any thickness can be cut using the same block. All you need to do is loosen the knobs and move the top until it fits against the panel you're cutting. Now you can make smoother cuts for the perfect panel.

Ed Singer
Albuquerque, New Mexico

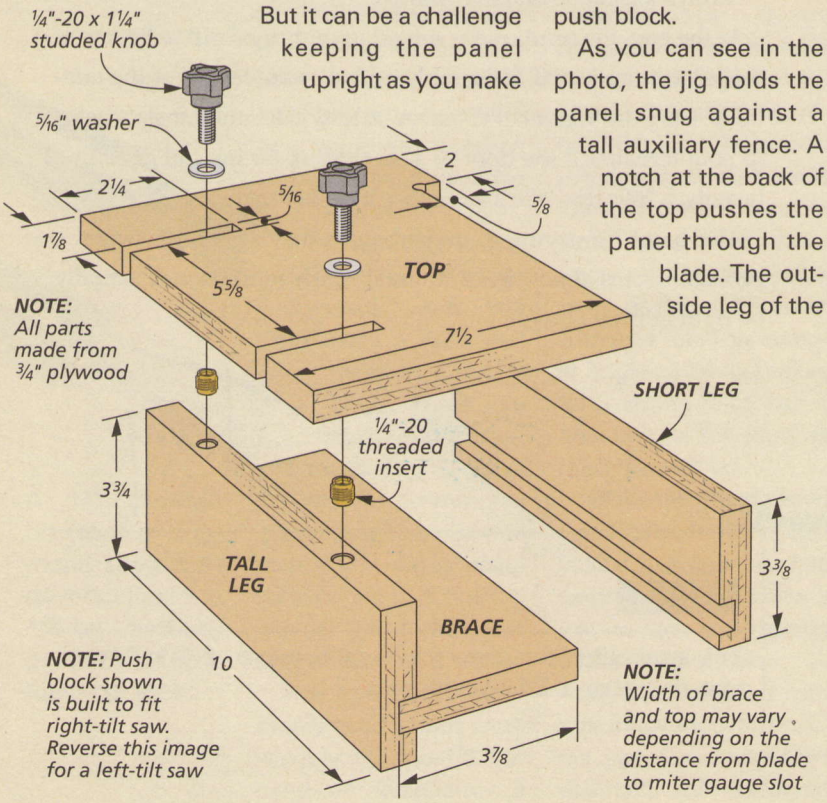

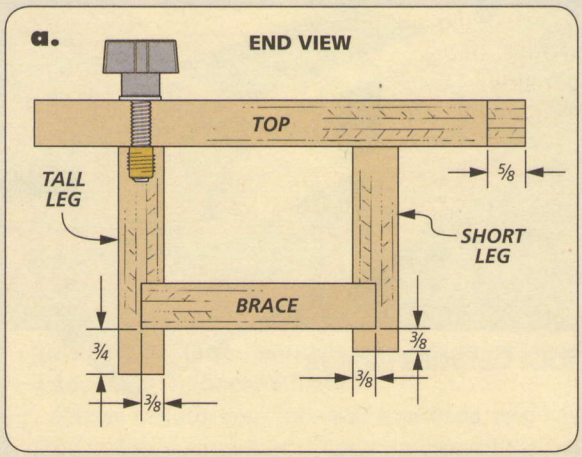

Flip-Up Stop Block

A flip-up stop block is a great addition to any router table or table saw miter fence. It gives you the flexibility of leaving the block attached to the fence when it's not in use. And that can save valuable set-up time.

I used a spring hinge to keep the block raised when it's not in use. As you can see in the drawing below, the spring hinge is attached to the face of each piece. The top piece holds the flange bolt and knob that keep the block in place in the fence track. I cut a bevel in the bottom block to help prevent sawdust build-up. The bottom block just flips up out of the way when not in use (insert photo).

Dan Locaputo
Cincinnati, Ohio

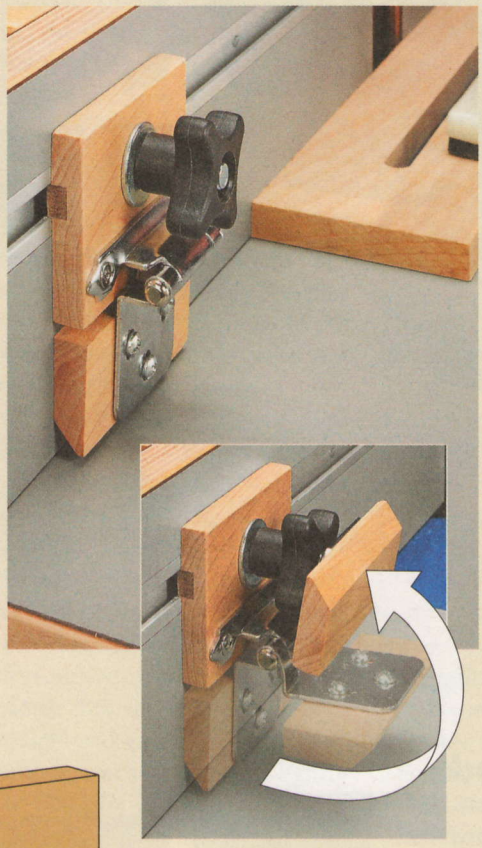

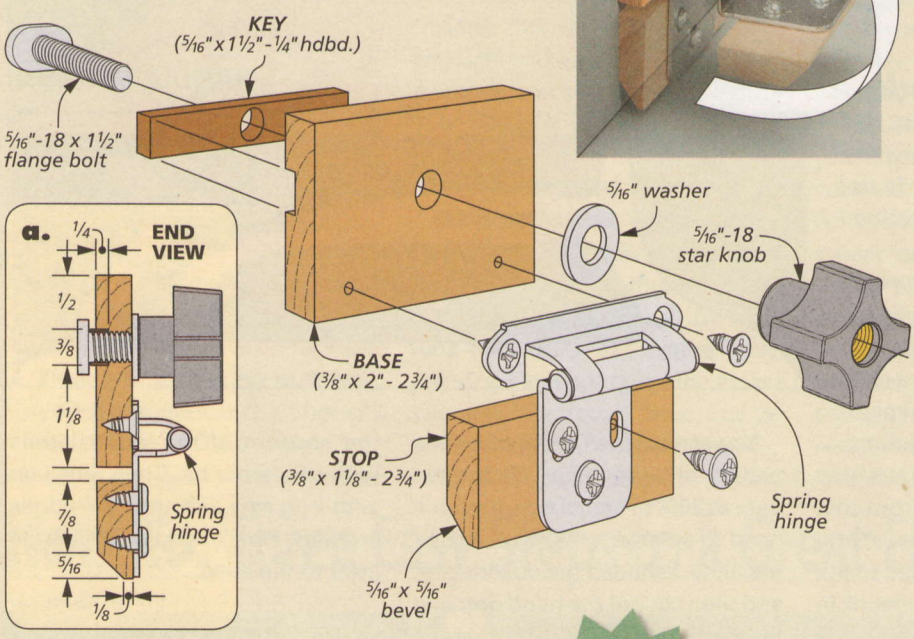

SUBMIT YOUR TIPS ONLINE

If you have an original shop tip, we would like to hear from you and consider publishing your tip in one or more of our publications. Go to:

Woodsmith.com
Click on the link,
"SUBMIT A TIP"

You'll be able to tell us all about your tip and upload your photos and drawings. You can also mail your tips to *"Woodsmith Tips"* at the editorial address shown at right. We will pay up to $200 if we publish your tip.

FREE TIPS BY EMAIL

Now you can have the best, time-saving secrets, solutions, and techniques sent directly to your email inbox. Just go to **Woodsmith.com** and click on ***"Sign Up for Free E-Tips."*** You'll receive one of our favorite tips each week.

Woodsmith®

No. 187 February/March 2010

PUBLISHER Donald B. Peschke

EDITOR Terry J. Strohman
MANAGING EDITOR Vincent Ancona
SENIOR EDITOR Ted Raife
ASSOCIATE EDITOR Dennis Perkins
ASSISTANT EDITOR Carol Beronich
CONTRIBUTING EDITORS Bryan Nelson, Phil Huber, Randall A. Maxey, Joel Hess, Catherine Seiser

EXECUTIVE ART DIRECTOR Todd Lambirth
SENIOR ILLUSTRATORS David Kreyling, Dirk Ver Steeg, Harlan V. Clark, Peter J. Larson, David Kallemyn
SENIOR GRAPHIC DESIGNER Bob Zimmerman
GRAPHIC DESIGNER Shelley Cronin
GRAPHIC DESIGN INTERN Megan Leafgreen

CREATIVE DIRECTOR Ted Kralicek
SENIOR PROJECT DESIGNERS Ken Munkel, Kent Welsh, Chris Fitch, Jim Downing, Mike Donovan
PROJECT DESIGNER/BUILDER John Doyle
SHOP CRAFTSMEN Steve Curtis, Steve Johnson
SENIOR PHOTOGRAPHERS Crayola England, Dennis Kennedy
ASSOCIATE STYLE DIRECTOR Rebecca Cunningham
SENIOR ELECTRONIC IMAGE SPECIALIST Allan Ruhnke
PRODUCTION ASSISTANT Minniette Johnson
VIDEO EDITOR/DIRECTOR Mark Hayes, Nate Gruca

Woodsmith® (ISSN 0164-4114) is published bimonthly (Feb., Apr., June, Aug., Oct., Dec.) by August Home Publishing Company, 2200 Grand Ave, Des Moines, IA 50312.
Woodsmith® is a registered trademark of August Home Publishing.

Copyright© 2010 August Home Publishing Company. All rights reserved.

Subscriptions: Single copy: $4.95.
Canadian Subscriptions: Canada Post Agreement No. 40038201. Send change of address information to PO Box 881, Station Main, Markham, ON L3P 8M6.
Canada BN 84597 5473 RT
Periodicals Postage Paid at Des Moines, IA, and at additional offices.
Postmaster: Send change of address to *Woodsmith*, Box 37112, Boone, IA 50037-2112.

WoodsmithCustomerService.com

ONLINE SUBSCRIBER SERVICES

- **VIEW** your account information
- **RENEW** your subscription
- **CHECK** on a subscription payment
- **PAY** your bill
- **CHANGE** your mailing or e-mail address
- **VIEW/RENEW** your gift subscriptions
- **TELL US** if you've missed an issue

CUSTOMER SERVICE Phone: 800-333-5075

SUBSCRIPTIONS
Customer Service
P.O. Box 842
Des Moines, IA 50304-9961
subscriptions@augusthome.com

EDITORIAL
Woodsmith Magazine
2200 Grand Avenue
Des Moines, IA 50312
woodsmith@woodsmith.com

AUGUST HOME PUBLISHING COMPANY

Printed in U.S.A.

Jointer Push Block

I've found that a push block that both pushes and holds down the workpiece on the jointer is not easy to find. That's why I decided to make my own.

As you can see in the main photo, the handle lets you apply downward pressure over the jointer tables. At the back, a cleat catches the end of the workpiece and pushes it across the jointer.

The drawing below shows how the push block is built from just three parts: a handle, a base, and a cleat. The base is attached to the handle with screws countersunk in the base. The cleat is glued on.

HANDLE PATTERN

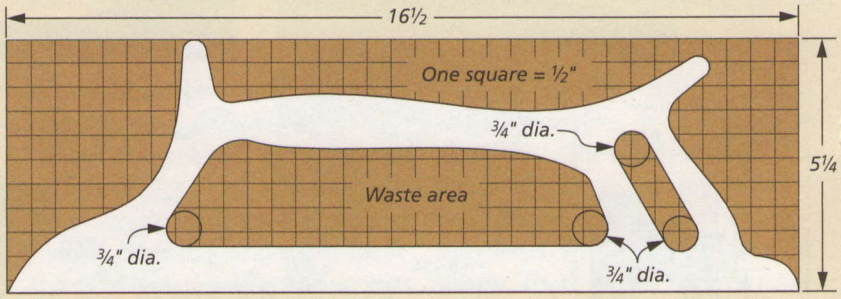

You can cut the handle using the pattern shown above. It's printed here at 25% of actual size, so you'll need to enlarge it 400% on a copy machine. I shaped the outside first and then cut out the hand grip and the center. You can drill holes in the corners of the waste areas with a Forstner bit. Then finish up with a jig saw and sand the edges smooth. Finally, you can glue the cleat to the base.

Victor Kurowski
Oro Valley, Arizona

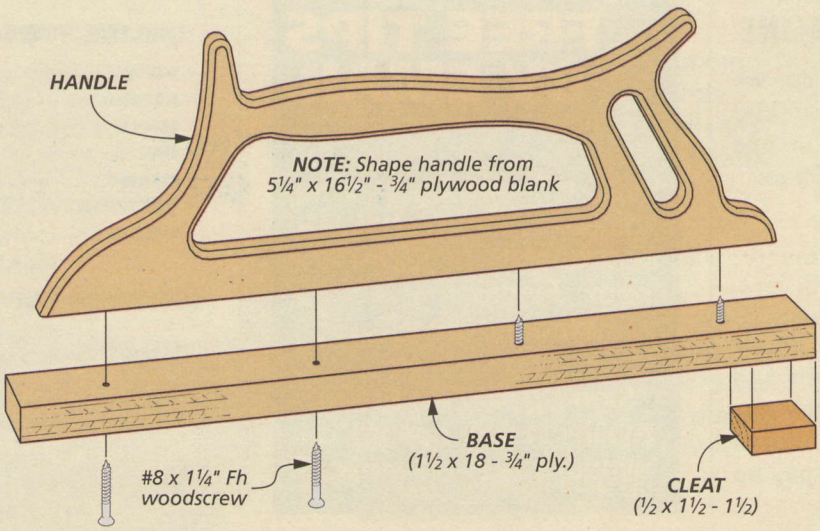

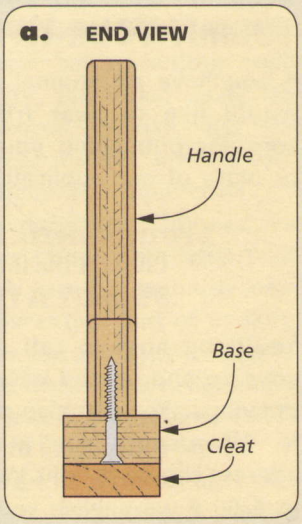

Spray Pan

Commercial spray cleaners are a great way to clean blades and bits. But the overspray can create an oily mess. I found the solution in an oven broiler pan I had on hand. The excess cleaner runs through the holes and collects in the pan.

If you don't have an old pan, you can purchase a new one at an appliance repair shop for about $20.

John Johnson
Church Hill, Tennessee

Blade Storage Spacers

My first requirement for saw blade storage is to keep the blades separated so I can grasp them easily and the teeth won't knock together. But spending a lot of time building a complicated project was out of the question. An easy solution is to use plastic dairy container lids as spacers.

I cut a piece of plywood a little larger than the blades and inserted a dowel in the center. Then I drilled holes in the lids with a Forstner bit and stacked them between the blades to separate them.

Cory Hoehn
Jacksonville, Indiana

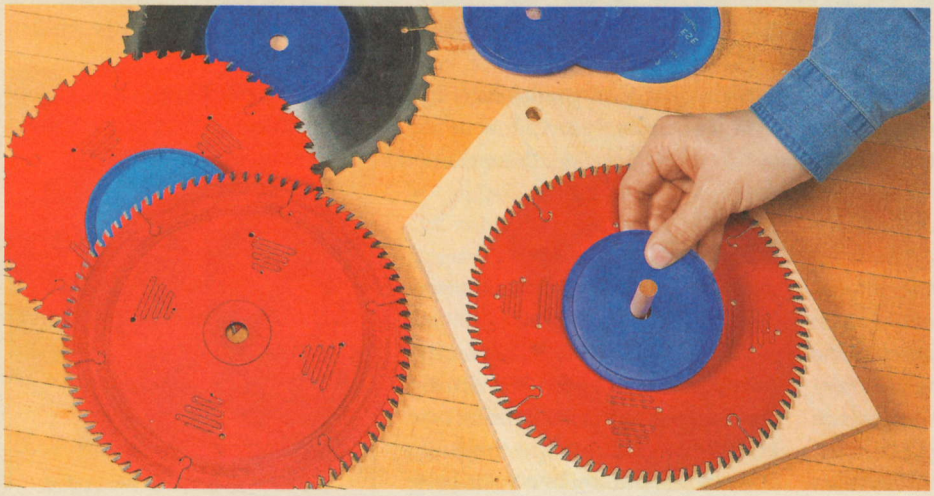

Win This Bosch *Impactor* Driver

That's right, send us your favorite shop tips. If your tip or technique is selected as the featured reader's tip, you'll win a *Bosch* impact driver just like the one shown here. To submit your tip or technique, just go online to *Woodsmith.com* and click on the link, "SUBMIT A TIP." You can submit your tip and upload your photos for consideration.

The Winner!

Congratulations to Ed Singer, winner of the *Bosch Impactor* driver. To find out how you could win a *Bosch* driver, check out the information on the left.

Quick Tips

REMOVING SPLINTERS

There are few things more irritating than a tiny splinter under your skin that's hard to remove. When this happens to me, I reach for a bottle of wood glue.

Just apply a dab of glue on the troublesome splinter and wait for it to dry. Then peel the glue off and the splinter will come out with it.

Bill Johnson
Marion, Indiana

DRILL PILOT HOLES FASTER

To drill a pilot hole for a screw, I usually have to look up the correct size of bit on a chart, find the bit, and then drill the hole. It's a time-consuming process that I seem to go through every time I start a new project. But I recently came up with a better, faster way.

Now when I buy a new box of screws, I find the correct size bit, and place it in a small plastic bag in the box of screws. This way, I always have the right bit at hand and I don't have to stop work.

Charles Mak
Calgary, Alberta

MITER SAW DETENT

I use a back saw and a miter box to cut large tenons. When cutting with my back saw in the miter box, I occasionally pull the saw back too far and it slips out of the guides, marring the workpiece. I had to find a way to stop the saw before ruining another workpiece.

First drill a small hole in the saw blade about ½" from the end and ½" from the bottom of the teeth. Then you can insert a bolt in the hole with a nut on either side of the blade and tighten it down.

This keeps the blade from coming out of the guide and keeps you from ruining the workpiece. When I need to remove the saw, I simply take the bolt out.

Craig Rethwilm
Johns Creek, Georgia

7 must-have Shop Clamps

The old saying, "You can never have too many clamps," is true. But making sure you have the right ones is another matter.

Having a good selection of clamps is essential. Most woodworkers will collect a number of F-style clamps, pipe clamps, and C-clamps. But some assemblies are made easier by using a more specialized clamp. Here are a few of my favorites. You can find out where to get these clamps in Sources on page 51.

Band Clamp

When it comes to clamping mitered boxes, a band clamp is my first choice. These clamps are available in a few different styles, but they all rely on a nylon strap to encircle the workpiece. You then tighten the clamp by turning a screw handle, as shown in the main photo, above.

Cam Clamp

A cam clamp is handy when you don't need a lot of pressure. Simply flipping the lever forces the cam against the jaw, tightening the clamp. But the thing I like best is that cam clamps are the most affordable option when your project needs deep-reach jaws.

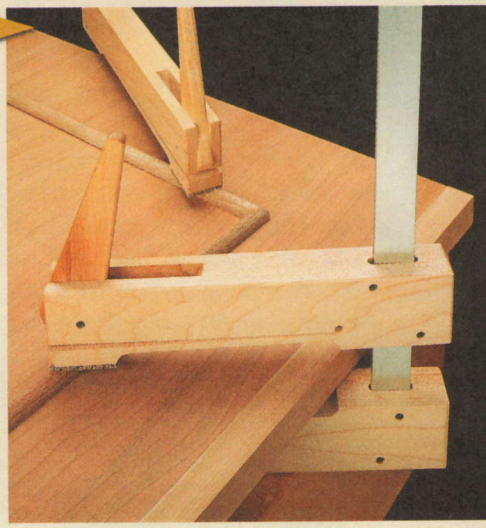

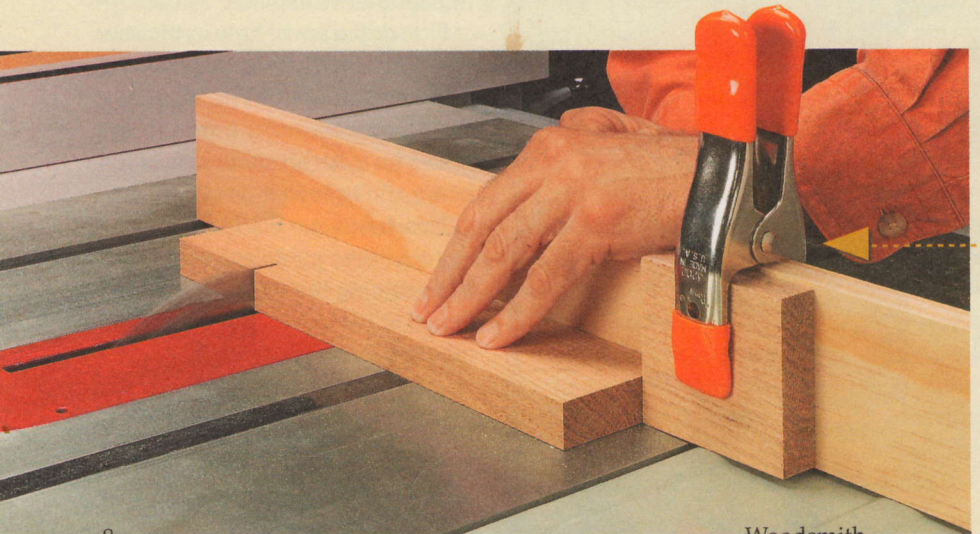

Spring Clamp

Inexpensive and easy to use, a handful of spring clamps can be the solution to a number of problems. From gluing small workpieces to holding a stop block on a miter gauge fence, they're a shop favorite. Best of all, they come in a variety of sizes. You'll find everything from a 2" mini clamp to a 10" monster.

Frame Clamp

While these clamps are very specialized, they really make it easy to glue up a mitered frame and keep it square during the process.

Once again, there are a few different designs, but they all use lengths of threaded rod and a right-angle caul on each corner. The cauls hold the mitered pieces in position while you turn the knobs to apply clamping pressure.

A big advantage of this kind of clamp is that you can adjust the pressure on each corner individually to keep the frame square.

Angle Clamp

Keeping the mating halves of a joint aligned and square is a common shop challenge. This angle clamp can take care of that, even with large, heavy workpieces.

The clamp actually grips each piece separately. You can't tighten it to draw the joint together. But it's open on the ends, leaving space for you to add screws or nails.

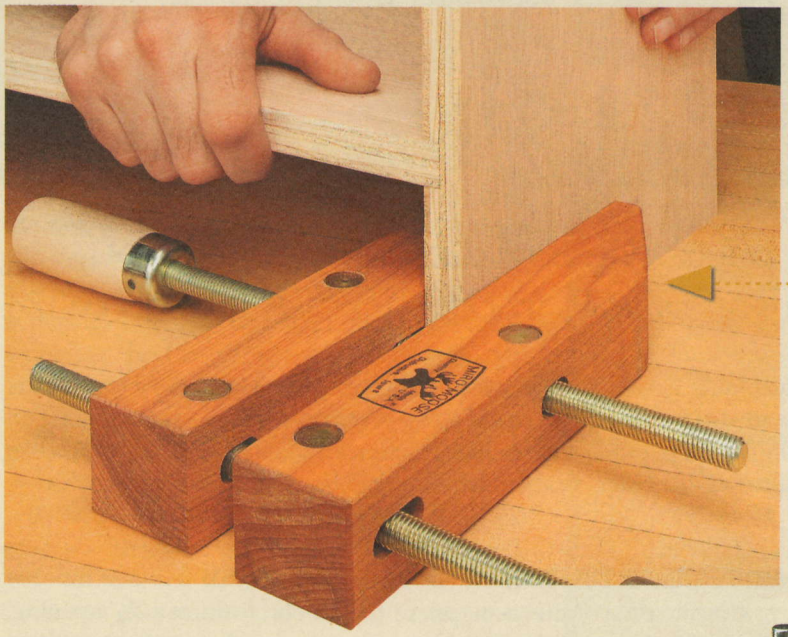

Hand Screw

It's hard to beat the versatility of a hand screw. I often use one to hold the side of a cabinet upright during assembly (photo at left). It's also the perfect tool for holding small parts when routing. Another nice thing is that the jaws adjust independently, making it great for holding tapered or odd-shaped workpieces.

Edge Clamp

If you've ever struggled to add hardwood edging to a plywood project, then you'll appreciate a set of edge clamps. One look at the photo at right and you can see why. An edge clamp is like having a third hand during assembly.

The design is pretty simple. Screws above and below secure the clamp to the workpiece. They also allow you to adjust the position of the third screw, mounted in the center of the bar. Tightening the third screw holds the edging in place.

With three or four of these, you can tackle most furniture projects with no problems. The one shown costs around $10. W

router table Dust Collection

Your router table can produce clouds of dust and mountains of chips in a hurry. Here are a few ways to catch them at the source.

Few tools offer the versatility of a router table. Fewer still produce the amount of chips and dust when in use. This not only makes a mess in the shop, but poses a health concern as well. So capturing them at the source is the best solution. Here are a few products that can keep the air clean whether you're routing an edge profile or a series of dadoes or grooves. You can find out where to get them in Sources on page 51.

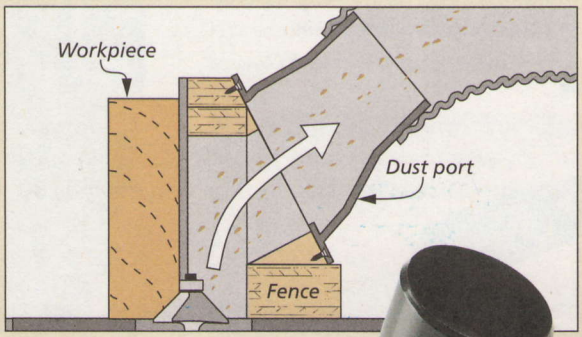

An inexpensive, plastic dust port mounted on the fence captures chips and dust very effectively. ►

FENCE-MOUNTED DUST PORT

A simple dust collection port attached to the fence of your router table is the first place to start corralling chips and dust. It's the least expensive and most effective addition you can make.

The port features a 2½" opening, designed to accommodate most shop vacuums. This port focuses collection right where you need it, making it highly efficient when routing the edge of a workpiece.

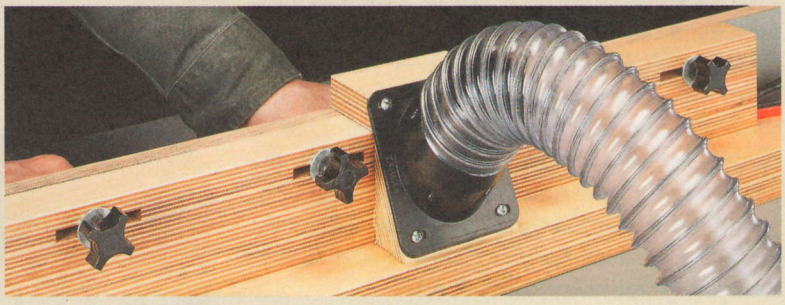

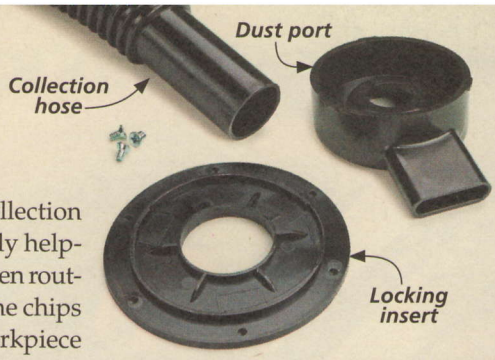

ROCKLER DOWN UNDER

While a fence-mounted collection port is a great start, it's only helpful when edge routing. When routing grooves and dadoes, the chips are trapped under the workpiece and can't be collected through the fence port. In this case, you need a method of collecting the chips from under the table.

Rockler's Down Under focuses the airflow of a dust collector in a circle around the bit. The plastic port locks onto the plate insert for a tight fit. This way, it pulls in the chips and dust before they fall into the air intakes of your router.

The *Down Under* works with any router, but requires a *Rockler* insert plate. You can connect it to a dust collector or shop vacuum.

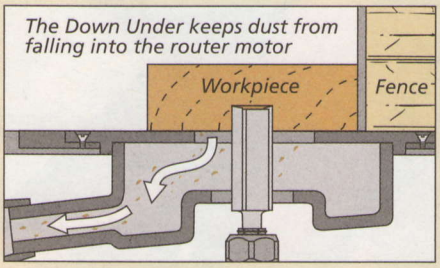

▲ A flexible, plastic collection hose is included with the *Down Under.* The hose fits snugly on the port to guarantee good airflow for removing chips.

ROCKLER DUST BUCKET

Rockler's Dust Bucket takes dust containment to the extreme. The "bucket" part of the collector is a galvanized steel box that mounts under the top or to the inside of your table to completely surround the router. As you can see in the main photo on the opposite page, when combined with a dual dust port (sold separately) the *Dust Bucket* offers dust collection both above and below the table.

The best feature may be the adjustable vent in the side that allows you to regulate the airflow. (Too much suction can cause your workpiece to stick to the tabletop.) The vent also helps prevent your router's motor from overheating. A hole for your router's power cord is sealed by a rubber grommet. A sturdy front door secures with a strong magnetic catch and makes it easy to access your router.

There is one thing to keep in mind before adding the *Dust Bucket* to your router table, however. You'll need a full-size dust collector to provide the suction. A shop vacuum isn't up to the task. W

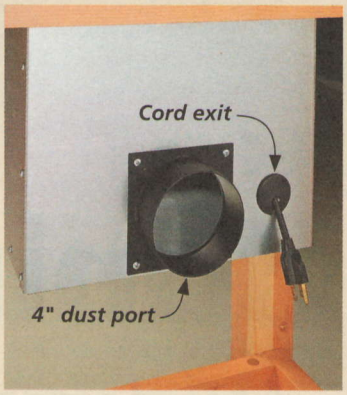

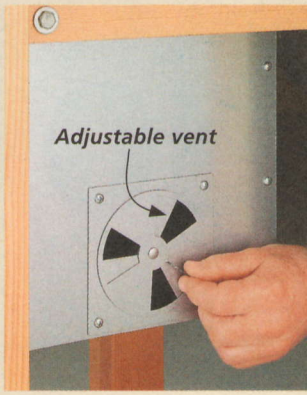

▲ A 4" dust port connects easily to most dust collectors. The adjustable vent on the side makes it easy to dial in just the right amount of airflow.

Double-Safe: Woodpeckers Free-Hand Guard

Freehand routing, like adding an edge profile on a round or curved workpiece, challenges even the dust collectors shown above. To safely rout these shapes, you usually need to move your fence out of the way and use a starter pin. *Woodpeckers Free-Hand Guard* provides a solution for both starting a freehand cut and collecting the dust and chips in the process.

As you can see in the photos at right, the guard also adds a clear plastic shield for chips. If you use a *Woodpeckers* router plate, the mounting holes are already in place.But you can always drill holes for the mounting screws in your existing tabletop or plate.

◄ In addition to collecting dust, the guard base also serves as a starting point for freehand cuts.

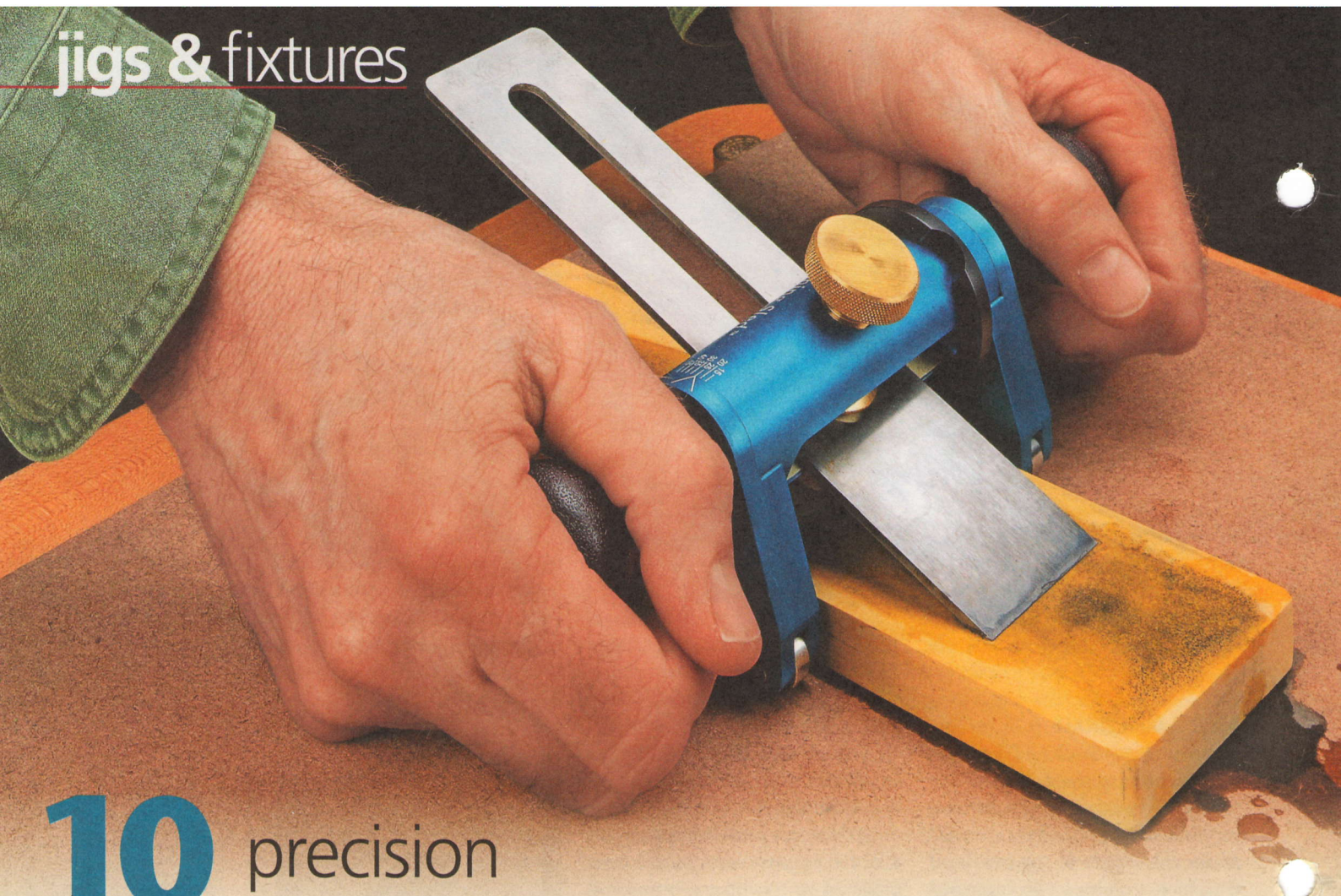

10 precision Honing Guides

A honing guide makes sharpening easy and accurate. But before choosing one, it's worth comparing the features among them.

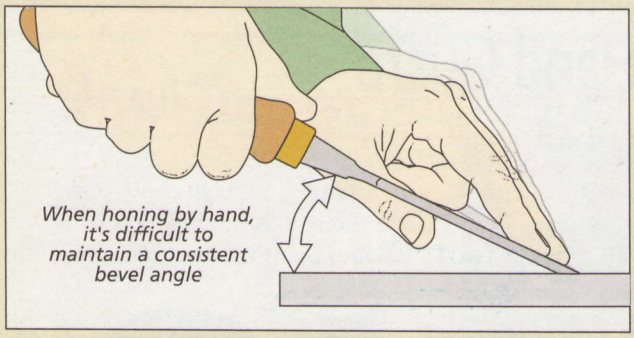

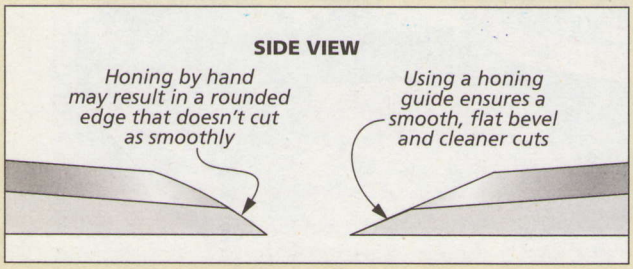

Sharpening is one of the most fundamental skills in woodworking. Unfortunately, it's one that also seems to give a lot of woodworkers trouble. Which probably explains the popularity of honing guides. You can hardly open a woodworking catalog without finding a new device that promises to make sharpening your hand tools foolproof.

It's certainly possible to learn how to sharpen accurately without the use of a honing guide. But when honing freehand, there's a tendency to slightly shift the angle of the tool at the beginning or end of each stroke. This can result in a rounded bevel that won't cut as effectively (see drawings at left).

A lot of woodworkers (myself included) find it easier to achieve consistent results with less hassle by using a guide of some sort. Since a honing guide holds the tool at a fixed angle to the sharpening stone, it's a lot easier to get a flat, consistent bevel. Most honing guides are also adjustable, making it easy to dial in an exact bevel angle.

Recently, I took a look at ten different honing guides and compared the features of each one. They range from simple, no-frills examples to ones loaded with bells and whistles. As you might expect, they also range in price, from under $20 to well over $100 at the upper end of the scale (see page 51 for sources).

General

The first honing guide I tried was one by *General*. This guide is made up of two halves that are hinged to adjust the bevel angle. A clamp at one end holds the tool, while a roller on the other end allows the guide to travel back and forth.

Unlike most of the other honing guides, the roller of the *General* guide doesn't ride on the sharpening stone. Instead, it rides on the surface of your workbench. This poses a problem if the faces of your sharpening stone aren't parallel. Additionally, you'll have to reset the guide whenever you switch to a sharpening stone of a different thickness. I find this to be a major drawback.

At around $20, the *General* honing guide is one of the less expensive models on the market. But I think there are better options available.

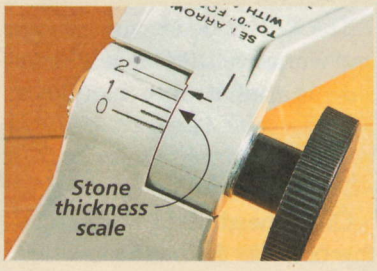

▲ The *General* guide rides on your bench rather than on the stone.

▼ *Stanley*'s honing guide is pretty basic, but it gets the job done.

Stanley

It seems only natural that a company known for its hand planes and chisels would also make a tool for sharpening them. The *Stanley* honing guide has been around for quite awhile, and hasn't changed much. It's available in a kit that includes an 8" oilstone and lubricating oil, all for $15.

One improvement that has been added to this honing guide over the years is a plastic, flip-down gauge (see photo at right) that helps you to position the edge of your tool for one of three commonly used bevel angles.

In use, I found clamping up a tool in the guide to be a bit difficult. You have to tighten down two thumbscrews to hold the tool in place, and they're uncomfortable to grasp and difficult to access. Once you have everything set up though, the jig performs adequately.

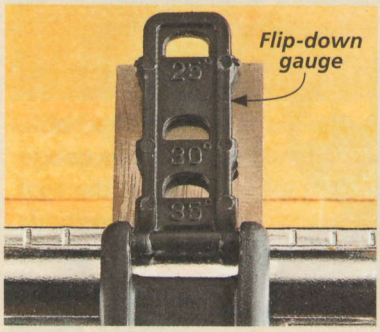

◄ A flip-down gauge helps you position your tool for the proper bevel angle.

Eclipse-Style

The original *Eclipse* honing guide was made for years by a company in England, and was a favorite of many woodworkers. Although the genuine *Eclipse* guide is no longer made, there are a number of slightly lesser quality knock-offs that sell from $10 to $15.

The *Eclipse*-style honing guide holds the tool to be sharpened between a pair of stout jaws. Plane irons fit in the upper opening and chisels fit in the lower opening. The design automatically squares up the tool in the guide, which cuts down significantly on set-up time.

My only real complaint with the *Eclipse*-style guide is the roller. Because it's so narrow, you have to be careful to avoid tipping the jig in use, especially with narrower blades. But if you're looking for a basic, no-nonsense honing guide, this one is hard to beat.

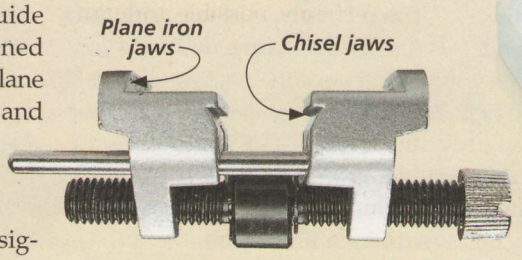

Front view

The *Eclipse*-style guide has been an old stand-by for decades. ►

▲ The *Kell* guide is suitable for short or long-bladed chisels.

Richard Kell

The *Kell* honing guide is a simple and elegant design. Made in England by craftsman Richard Kell, it's beautifully machined and is silky smooth in operation. Rather than positioning the roller at the rear, this guide uses a pair of rollers on the sides of the jig.

The *Kell* guide is simple to use and works well. It's biggest downside is that it only handles blades up to 1¼" wide, making it useful only for chisels. *Kell* makes a wider version of the guide that will accommodate blades up to 2⅝" wide. But the wide version is awkward to use with narrow tools, so you really need to have both models. At approximately $70 apiece, this starts to become an expensive proposition.

▲ An easy-to-read scale allows you to set the bevel angle.

Alisam Sharpening Sled

Like the *Kell* guide, the *Alisam Sharpening Sled* also features side-mounted rollers. But the *Alisam* sled straddles the stone rather than riding on top of it. This wide stance makes it easy to control.

The *Alisam* sled is offered in three heights to accommodate different sharpening surfaces, from thin surface plates to 2"-thick waterstones. The sides detach from the body of the sled, so you can change heights by simply swapping one pair of sides for another. (Extra pairs of sides are sold separately.)

Of all the guides I tried, this one was the most comfortable to use. The large handles on either side of the sled make it easy to grip.

Like the *General*, the *Alisam* sled requires that your sharpening stone has perfectly parallel sides. But for sharpening on a surface plate with sandpaper, where this isn't an issue, this guide is a good choice.

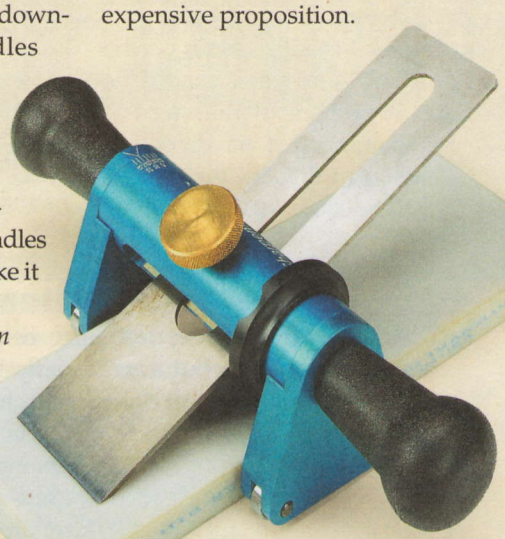

▲ The *Alisam* sled is available in three different heights, and ranges from $70 to $80.

▼ A detachable set-up gauge squares the tool and positions it in the guide.

Veritas Mk. II

It's hard not to like the *Veritas Mk. II* honing guide. The clamping bar holds the tool securely. The wide roller operates smoothly and has a built-in feature for adding a micro-bevel to the edge of a tool. The contoured body makes it comfortable to hold onto and use.

The *Mk. II* is supplied with a set-up gauge that squares the tool in the jig and makes it easy to precisely position the edge for any bevel angle you can imagine. It can even be used for honing back bevels on plane irons.

It's hard to find fault with this guide, but if I had to, I'd say that it's a bit large and heavy compared to some of the other guides. This can make it a little harder to control when sharpening narrow chisels. Still, it remains my favorite. At $62.50, it's in the mid-price range.

Veritas Honing Guide

The original *Veritas* honing guide is the precursor to the *Mk. II* version shown above. For some reason, *Veritas* continues to make this earlier model, even though it's kind of like *IBM* making typewriters after the advent of personal computers.

Combined with the angle jig (shown at left), the *Veritas* is fairly easy to set up. A quarter or half turn of the knob on the side of the roller allows you to quickly add a micro-bevel to any tool.

The main gripe I have with the *Veritas* is the clamp. It's easy for tools (especially narrow chisels) to slip and pivot under the single-point clamp. At $45 for the guide and angle jig, I'd say you're better off spending a little more for the *Mk. II*.

The angle jig gives you a choice of five different bevel angles. ▼

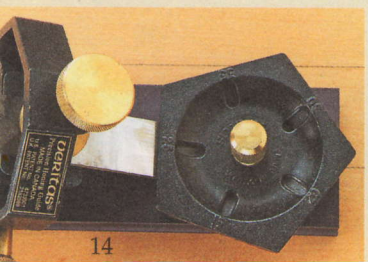

Pinnacle

The *Pinnacle* honing guide wins the Rube Goldberg award for the most complex design. Unlike all the other guides, this one doesn't use rollers. Instead, the tool is held in a sled that rides in a pair of rails.

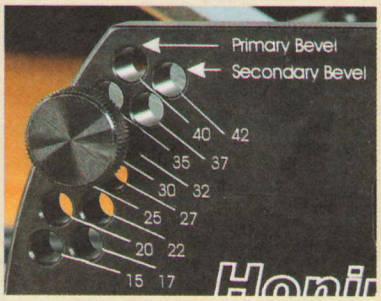

▲ A series of holes allows you to position the guide for a range of pre-set angles.

Slick, plastic wear strips allow the sled to slide back and forth over a sharpening stone or a metal honing plate that can be used with sandpaper or an abrasive honing film.

The guide features a range of adjustments that enables you to hone the primary bevel at 5° increments, and then position the guide for a 2° secondary (micro) bevel.

Although the *Pinnacle* guide gives good results, the set-up time and number of adjustments required are both major drawbacks. This, combined with a cost of around $100, makes it a hard sell.

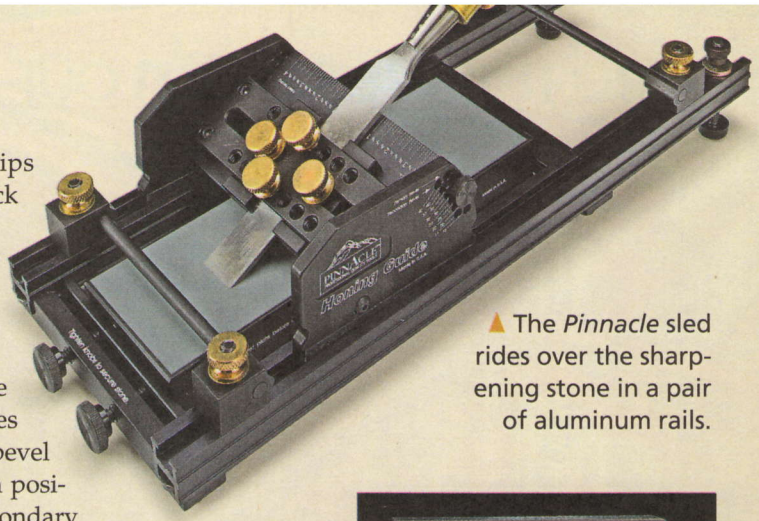

▲ The *Pinnacle* sled rides over the sharpening stone in a pair of aluminum rails.

This angle gauge, available separately, provides quick and accurate measurements. ►

Sharp Skate 2

The *Sharp Skate 2* is unique in that unlike all the other honing guides, it's designed to sharpen from side to side rather than back and forth. The bottom of the guide has a row of tiny rollers, like an inline skate.

The guide is nicely machined and comes with a jig (the *Angle Dock*) for setting the bevel angle. One selling point of the *Sharp Skate* is that it can handle short-bladed Japanese chisels and skewed chisels.

The inventor of the *Sharp Skate* claims that side-to-side sharpening is easier to master. Although it felt a little unnatural at first, I imagine I could get used to it. But unfortunately, with a price tag of $170, I doubt that I'll have the opportunity to find out any time soon.

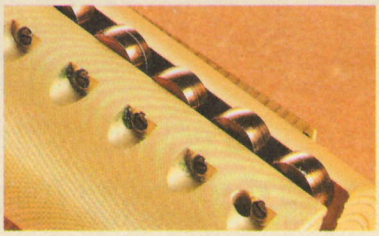

◄ Hardened steel rollers allow the *Sharp Skate* to travel smoothly across the stone.

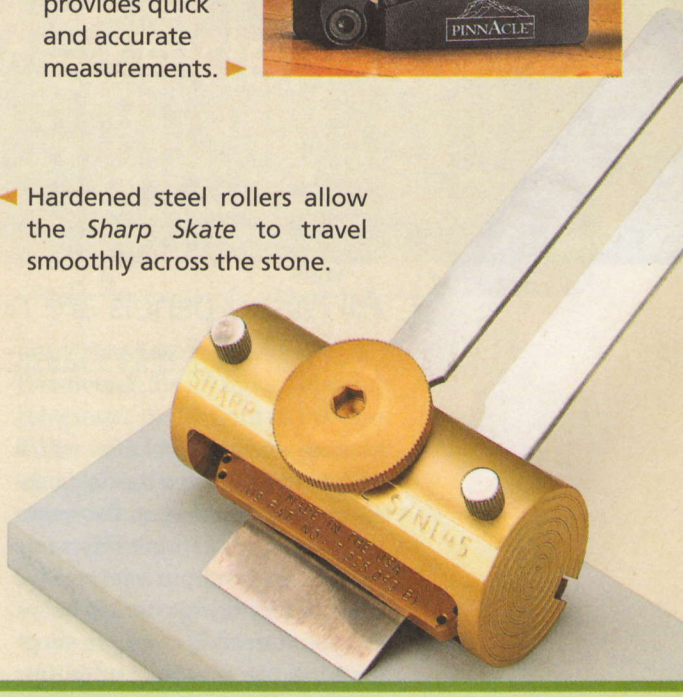

Worth a Look: Oar Honing Guide

All of the honing guides shown above are designed to handle straight-edged tools like chisels and plane irons. But the *Oar* honing guide (shown at right) is designed specifically for gouges. The curved design of the guide allows you to "rock" the tool back and forth over the stone, following the sweep of the curved edge (see photos below).

The *Oar* guide is useful for establishing an initial bevel angle. But it's time-consuming to set up. So I think you're better off learning to do any subsequent honing freehand.

▲ Changing out the socket screw in the guide allows you to hone gouges of varying sweeps.

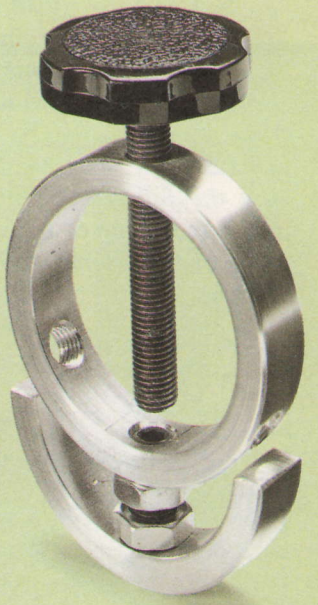

easy table saw Raised Panel

All raised panels are not created equally. With this simple technique, you can get this classic, coved door panel using a table saw.

Making a raised panel door with a coved border around the field usually means working on the router table. But you can get this same custom look, without an expensive router bit, by using your table saw. All you'll need is a simple shop-made, table saw jig and a few minutes of set up.

CURVE CUT. The technique for cutting the cove is definitely not a "straight cut" operation. The panel is pushed over the blade at an angle. If you take a look at the upper drawing on the opposite page you'll see what I mean. The cove is made in multiple, light cuts. This causes the saw blade to "shave" wood off the length of the panel leaving an elliptical curve from the arc of your saw blade.

SETUP. The setup shown in the drawings on these two pages, is specific to the raised panel used with the storage bench on page 22. But with adjustments, you can use this technique to cut any size cove on a variety of panel inserts.

You begin by roughing out the cove on the edges of the panel. Then finish up by trimming off the outside edge of the cove with the panel held vertically to the blade. I used a flat-toothed rip blade to get a smoother cut on the cove.

The workpiece is guided by a fence clamped at an angle to the table saw blade. You can change the width and depth of the profile by

Use the full-size pattern below to draw an outline of the cove on the edge of each corner of the panel.

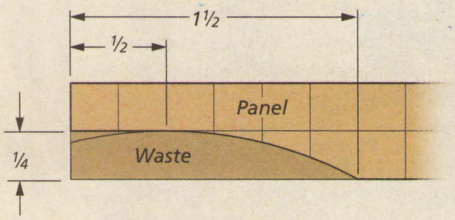

One square = ¼"

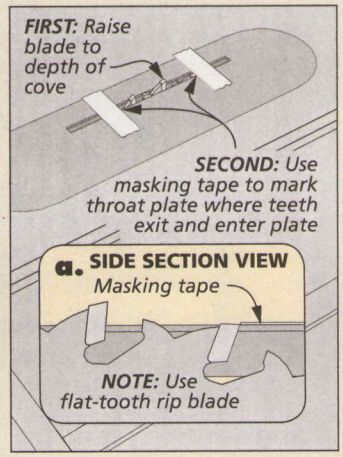

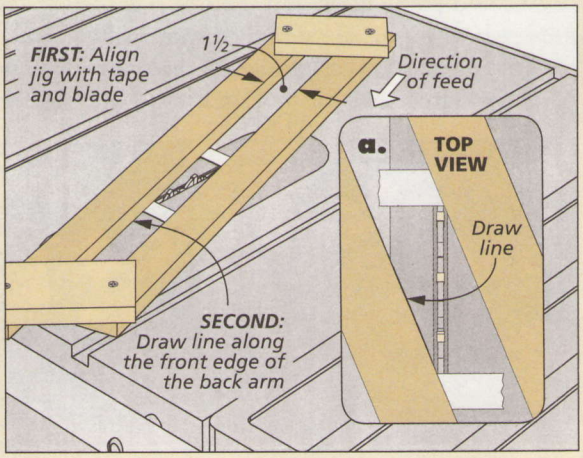

changing the angle of the fence or the height of the blade. To find the angle for the panel, I used a parallelogram jig like the one shown in the drawing on the opposite page.

The arms of the jig are set to match the width of the cove on the panel. Once you've set up the jig, raise the saw blade to the final depth of the cove. Then mark the throat plate with masking tape where the teeth of the saw enter and exit the plate, as shown in the left drawing on the opposite page.

Now lay the jig over the saw blade and line up the arms with the tape (right drawing on the opposite page). Finally, mark a line on your table saw along the inside edge of the back arm. This line is for the fence placement. As you can see in the drawing on the right, the fence is nothing more than a long, straight board. It's clamped on the line as shown in the drawing.

MULTIPLE CUTS. After the fence is in position, the rest is pretty simple. You're going to cut the cove by removing small amounts of material in multiple passes. Lower the saw blade to take just 1/32" off on the first pass. Use push blocks to keep the panel snug to the fence.

Since you're cutting all four edges of the panel, make a pass on each edge. Then raise the blade just a hair (about 1/32") between passes.

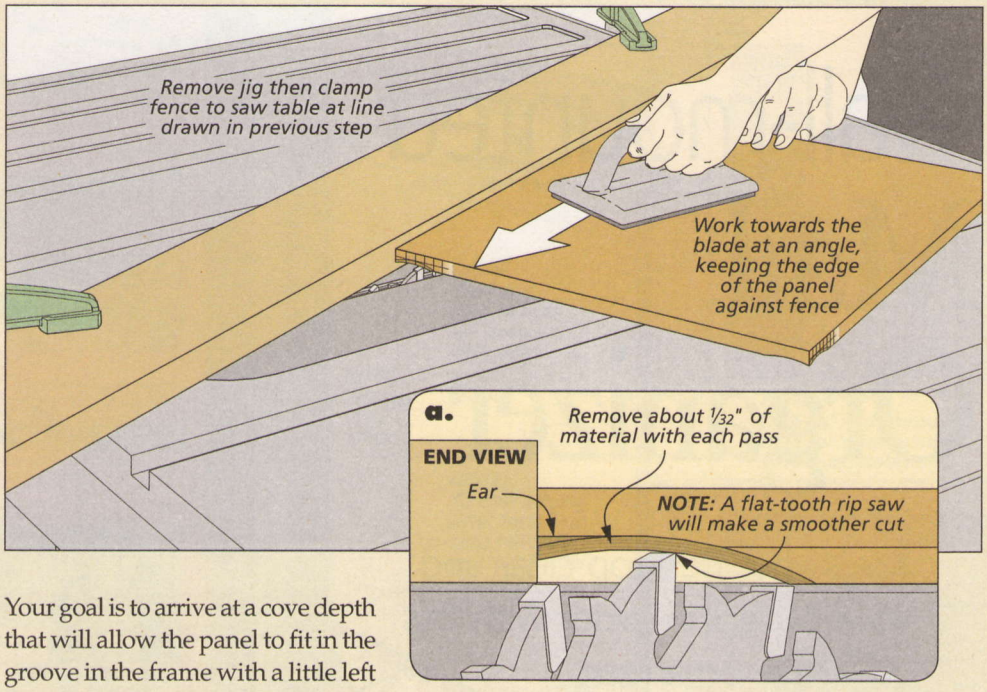

Your goal is to arrive at a cove depth that will allow the panel to fit in the groove in the frame with a little left for sanding the cove smooth. This will take some time to accomplish, so be patient.

EAR. After you have the cove cut to the correct depth, you'll notice a little "ear" on the outside edge of the panel. You remove this at the table saw using a tall auxiliary fence (box below). Simply stand the panel on edge with the fence set far enough from the blade to just nip the waste. Adjust the fence in to sneak up on the right distance. (Be careful not to set the fence too close or you'll create a rabbet.) This final cut will also flatten the edge for a better fit in the door frame groove.

For a decorative touch, I added flutes on the panel face. You can rout these now (center drawing). Since the flutes are routed with the grain there shouldn't be any danger of tearout on the ends of the cuts.

The last step is to sand the cove to a smooth finish. You can shape a block from foamboard to hold the sandpaper. When the sanding is complete, you'll have master ed a table saw technique. And you'll have a panel that looks great.

How-To: Complete Panel Edge Profile

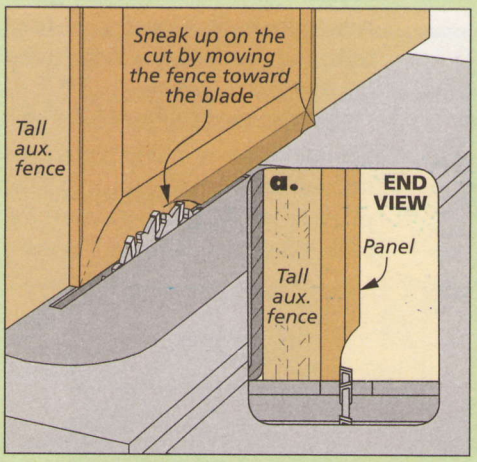

Trim the Edge. *Shave off the small ear that appears after the cove is made by trimming it off on the table saw.*

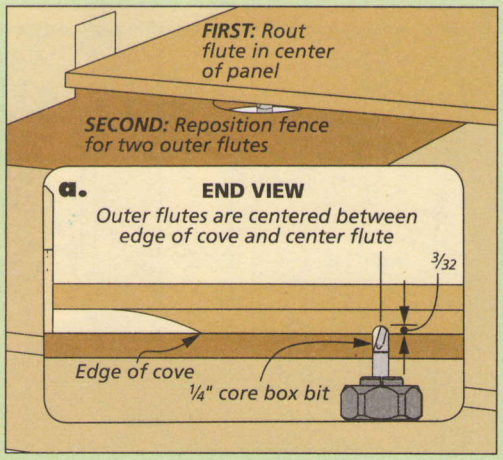

Flutes. *Flutes are added on the router table with a core box bit, first in the center then on either side, as shown in the detail.*

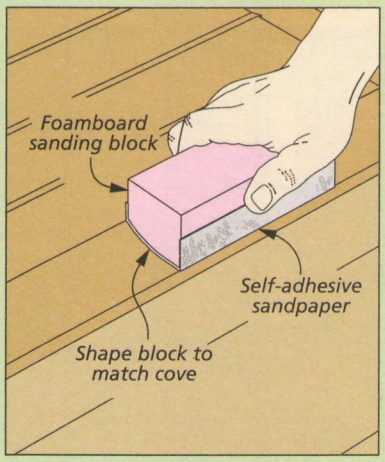

Smooth the Cove. *A curved sanding block will keep the curve in shape as you sand it smooth.*

wall-mounted Mail Organizer

Keep your desktop clear and your papers in order with this attractive organizer.

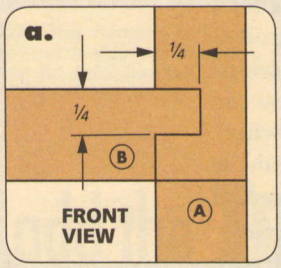

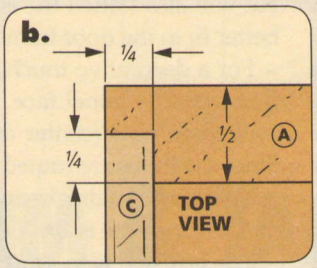

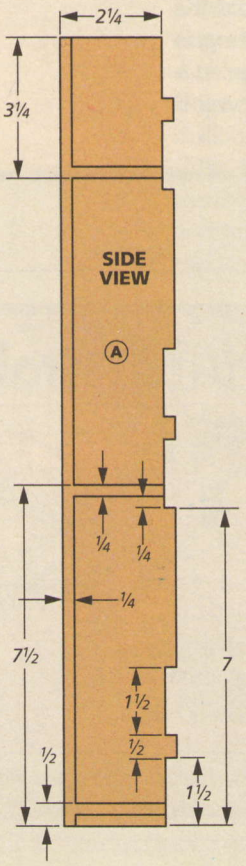

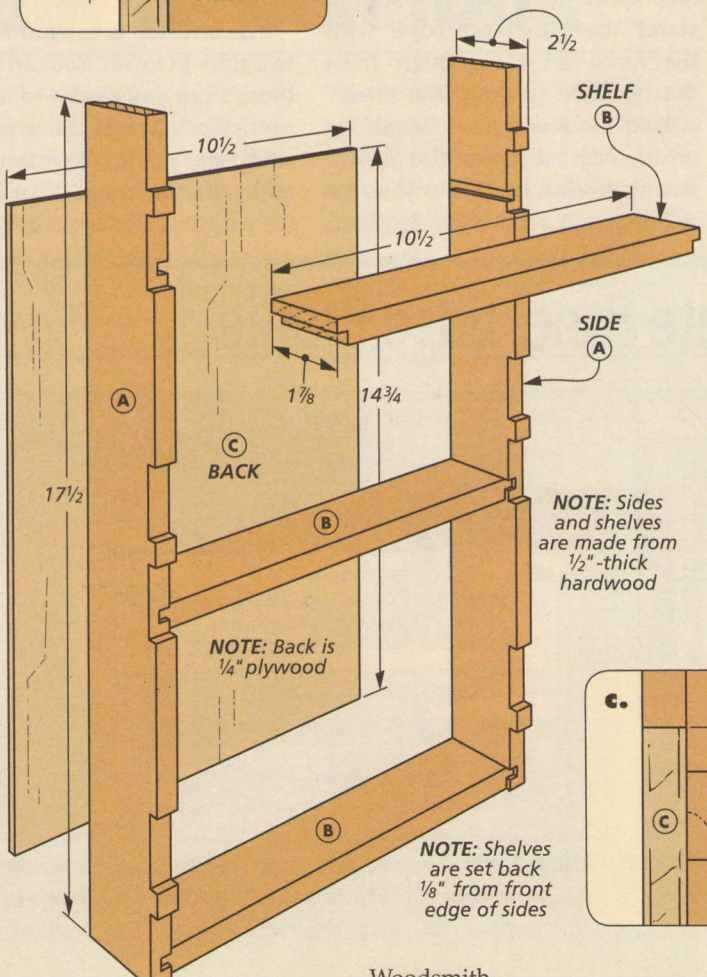

Keeping letters, bills, and papers sorted is always a challenge. That's why I built this handy mail organizer. By hanging it on a wall in my office, I can keep all that correspondence close at hand.

From a woodworking perspective, it's a quick and straightforward project to build. The tongue and dado construction makes the joinery a breeze while also providing plenty of strength. Most of the joinery work is done on the sides. Then it's just a matter of cutting rabbets on the ends of the shelves, front rails, and the back rail. A plywood back keeps everything square.

PREPARING THE SIDES. As I said earlier, the majority of the work goes into making the sides. So that's the place to get started. After cutting both sides to final size, I used a

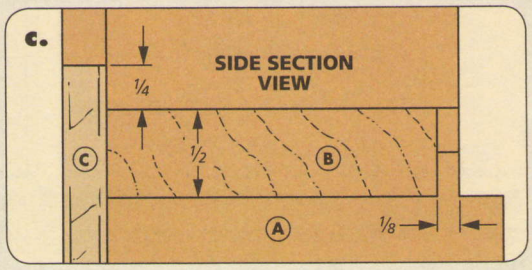

couple pieces of double-sided tape to fasten them together. This way, I know they'll be identical as I cut the notches for the rails in the front edges (see Shop Tip below).

With the pieces taped together, I laid out the location for the notches on one end of the blanks. Since the notches are all evenly spaced from the center, you can use a simple "cut-and-flip" technique at the table saw to ensure they're all perfectly spaced. So laying out the locations on one end is all you need to do before making the cuts.

CUTTING THE NOTCHES. The next step is to install a dado blade in the table saw, set to make its widest cut. I also attached an auxiliary fence to the miter gauge and used the layout marks to position a stop block to control the location of the cuts.

With everything set up, you can now make the cuts on both ends, forming the first notch. Then it's simply a matter of using this same technique to cut the remaining notches. Just reset the stop block, make a cut, flip the workpiece, and continue to complete the notches. Finish up by cutting the rabbet on the back edge of both sides to hold the back rail and the back panel.

DADOES. When you've finished the sides, separate the two pieces and get ready to cut the dadoes for the shelves on the inside faces. Change the width of your dado blade to ¼" and cut the dadoes at the locations shown in the drawing on the opposite page.

SHELVES. To fit the shelves in the sides, you'll need to cut a rabbet on each end. For this, I added an auxiliary fence on the rip fence and buried part of the dado blade in it. Then simply use the miter gauge to guide the workpieces through the cut. Start with the blade a little low and sneak up on a tight fit in the sides.

BACK PANEL. At this point, you can assemble the sides and shelves. When you're done, just cut the back to size and attach it in the rabbet on the back with glue and a few brads.

FRONT RAILS. The front rails form the compartments on each shelf. Like the shelves, they need a rabbet on each end to fit into the notches in the sides. I used the same setup as before, but for these you'll need to expose a little more of the blade.

BACK RAIL. The back rail provides a solid place to install a hanger for the organizer. Refer to Shop Notebook on page 30 for a tip on how to make the cavity for the hanger. After that, I headed back to the table saw to cut the rabbets on each end and on the bottom edge (detail 'c').

FINAL ASSEMBLY. The tongue and dado construction of this project makes assembly a snap. All you need to do is add glue to the joints and clamp the front and back rails in place. After adding a finish, all that's left is to find a spot on the wall to hang it. Then you'll be on your way to getting a little more organized. W

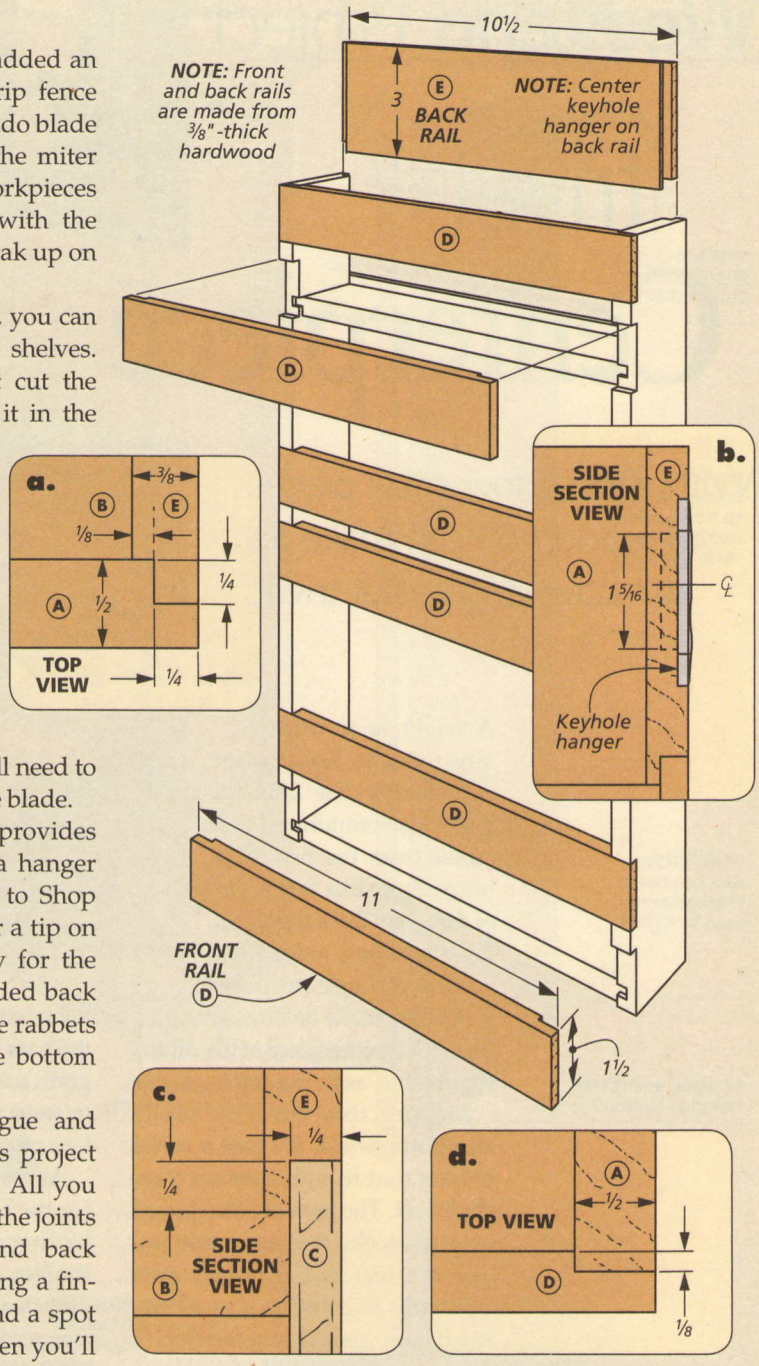

Materials, Supplies & Cutting Diagram

A	Sides (2)	½ x 2½ - 17½
B	Shelves (3)	½ x 1⅞ - 10½
C	Back (1)	¼ ply. - 10½ x 14¾
D	Front Rails (6)	⅜ x 1½ - 11
E	Back Rail (1)	⅜ x 3 - 10½

- (1) Keyhole Hanger w/Screws
- (16) ¾ Brads

Also needed: One 24" x 24" sheet of ¼" Cherry plywood

½" x 6" x 30" Cherry (1.25 Sq.Ft.)

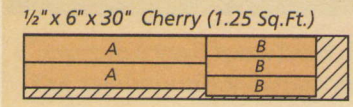

½" x 6" x 36" Cherry (1.5 Sq.Ft.)

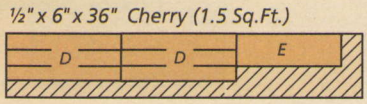

Shop Tip: Notches

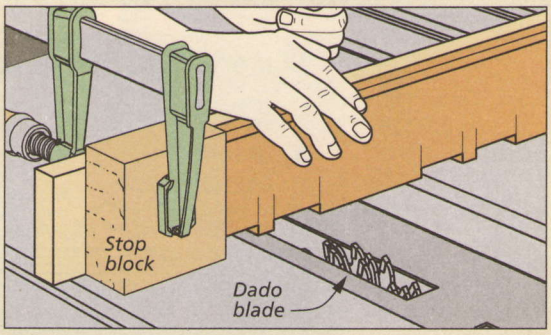

Uniform Notches. *With the sides taped together and an auxiliary fence on the miter gauge, cut one notch then flip the workpiece end-for-end.*

Weekend Project

trivet Centerpiece

With a just a few small pieces of wood, you can make an attractive and useful trivet.

A trivet is traditionally used to hold a hot container in the kitchen. It guards countertops and tables from the heat of a hot pan or dish taken out of the oven. But a trivet can do something more than serve a practical purpose, it can also make an attractive platform for a centerpiece at the dining room table, as in the photo above.

Making this trivet is pretty straightforward. It's just a series of bars that fit into slots on three short feet. The bars are also joined by end blocks that are made just like the feet but trimmed after assembly to provide a more finished look. You can cut the slots in the feet and end blocks by using a simple box joint jig.

SELECT YOUR STOCK. Before you get started, it's a good idea to look over your stock and select the most straight-grained pieces for the bars. If the bars have too much grain runout, they're liable to bow or twist which can distort the surface of the trivet.

As you can see, I used maple for the bars. It's a reasonably stiff hardwood that will stay flat. For the feet, I chose wenge, a dark and very dense wood that also provides a nice contrast with the maple.

THE BARS. The first step in making the trivet is to cut the bars. For these pieces, you'll either need to purchase ½"-thick stock or plane thicker stock down to ½". Now head over to the table saw and rip the bars slightly wider than ¼". Afterwards, you can run the bars through the planer to remove the saw marks, finishing up with the bars at ¼" thick. Then you can set them aside and turn your attention to the feet and end blocks.

FEET & END BLOCKS. As I said earlier, the feet and end blocks are made using the same box joint technique and are even the same size. The only difference is the type of stock used for each. The legs are wenge, while the end blocks are maple to match the bars.

Materials, Supplies & Cutting Diagram

A	Bars (15)	½ x ¼ - 18
B	Feet (3)	½ x 7⅛ - 1
C	End Blocks (2)	½ x 7⅛ - 1

½" x 8" - 24" Maple (1.3 Sq. Ft.)

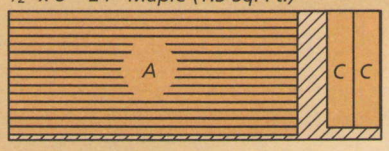

½" x 8" - 12" Wenge (.7 Sq. Ft.)

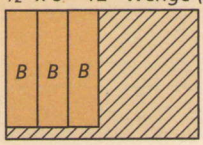

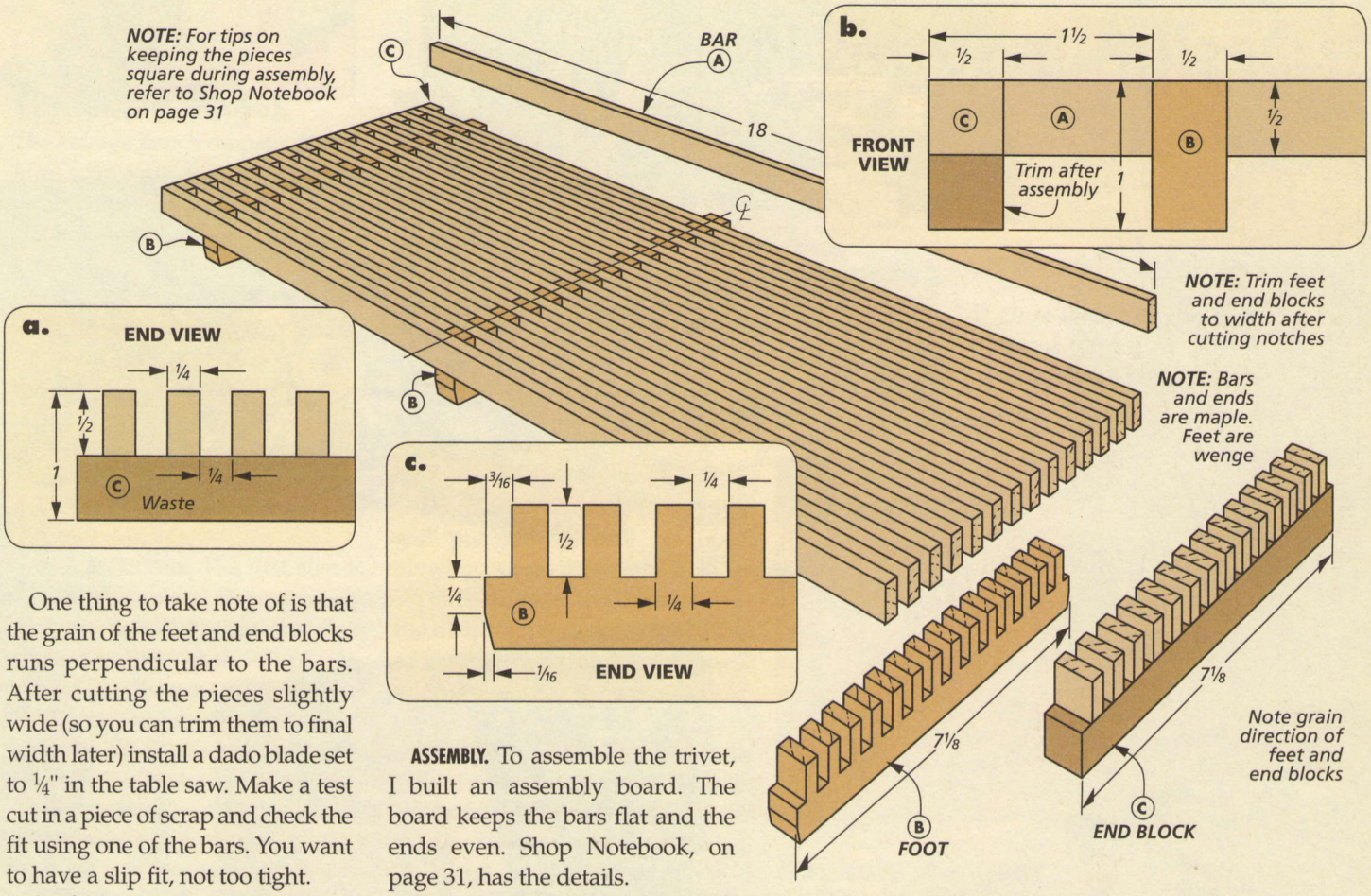

One thing to take note of is that the grain of the feet and end blocks runs perpendicular to the bars. After cutting the pieces slightly wide (so you can trim them to final width later) install a dado blade set to ¼" in the table saw. Make a test cut in a piece of scrap and check the fit using one of the bars. You want to have a slip fit, not too tight.

At this point you can set up a box joint jig or attach a ¼"-thick index key to an auxiliary fence on your miter gauge. Then cut the ¼" spaces in each piece (box below).

When you're finished, install a regular blade and trim the feet and end blocks to final width. Then set the miter gauge 20° and cut the small chamfer on the ends of each foot, as shown in detail 'b.'

ASSEMBLY. To assemble the trivet, I built an assembly board. The board keeps the bars flat and the ends even. Shop Notebook, on page 31, has the details.

Start by laying out the bars on the board and marking the centerline. Then, brush a little glue in the notches in the center foot and press it into position on the bars.

Now tap the foot to make sure it's seated on the bars and add a clamp. To keep the spacing of the feet uniform, I cut a couple of spacers. Add the outer feet and end blocks using the same technique.

Clamp the assembly by placing a clamp across each foot and end block (center drawing, below).

When the glue dries, you're ready to trim the waste off the end blocks. For this, I attached a tall fence to the rip fence and cut both ends at the table saw. The right drawing below shows how it's done. All that remains now is to add the finish. W

How-To: Make the Feet and Spacer Blocks

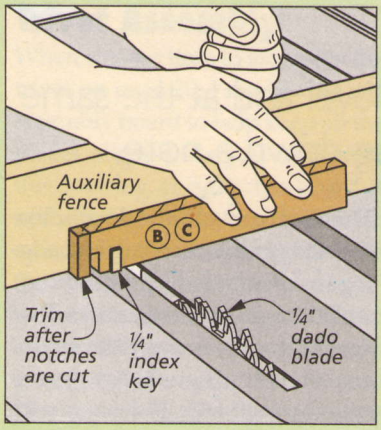

Notches. *Cut a notch in the auxiliary fence and fit an index key in place to control the spacing of the cuts.*

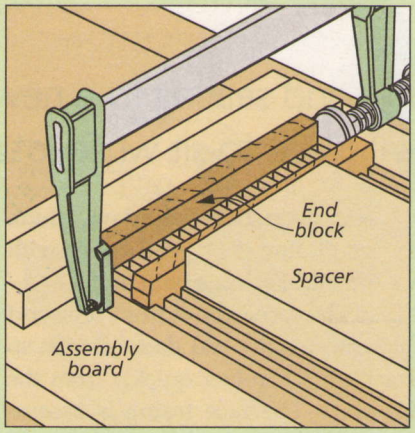

Assembly. *Using the assembly board to hold the bars, attach the feet and end blocks with glue and clamps.*

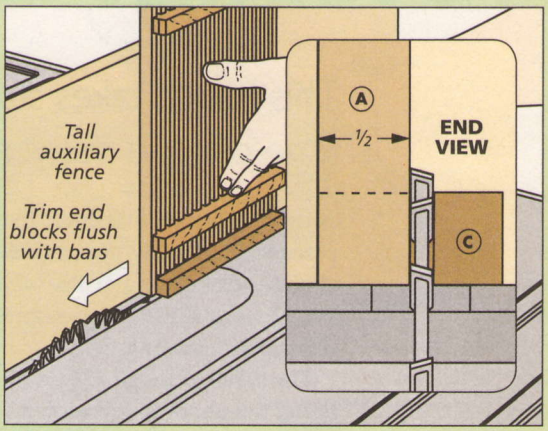

Trim the End Blocks. *Attach a tall auxiliary fence to your rip fence and hold the assembled trivet on end to trim the waste from the end blocks.*

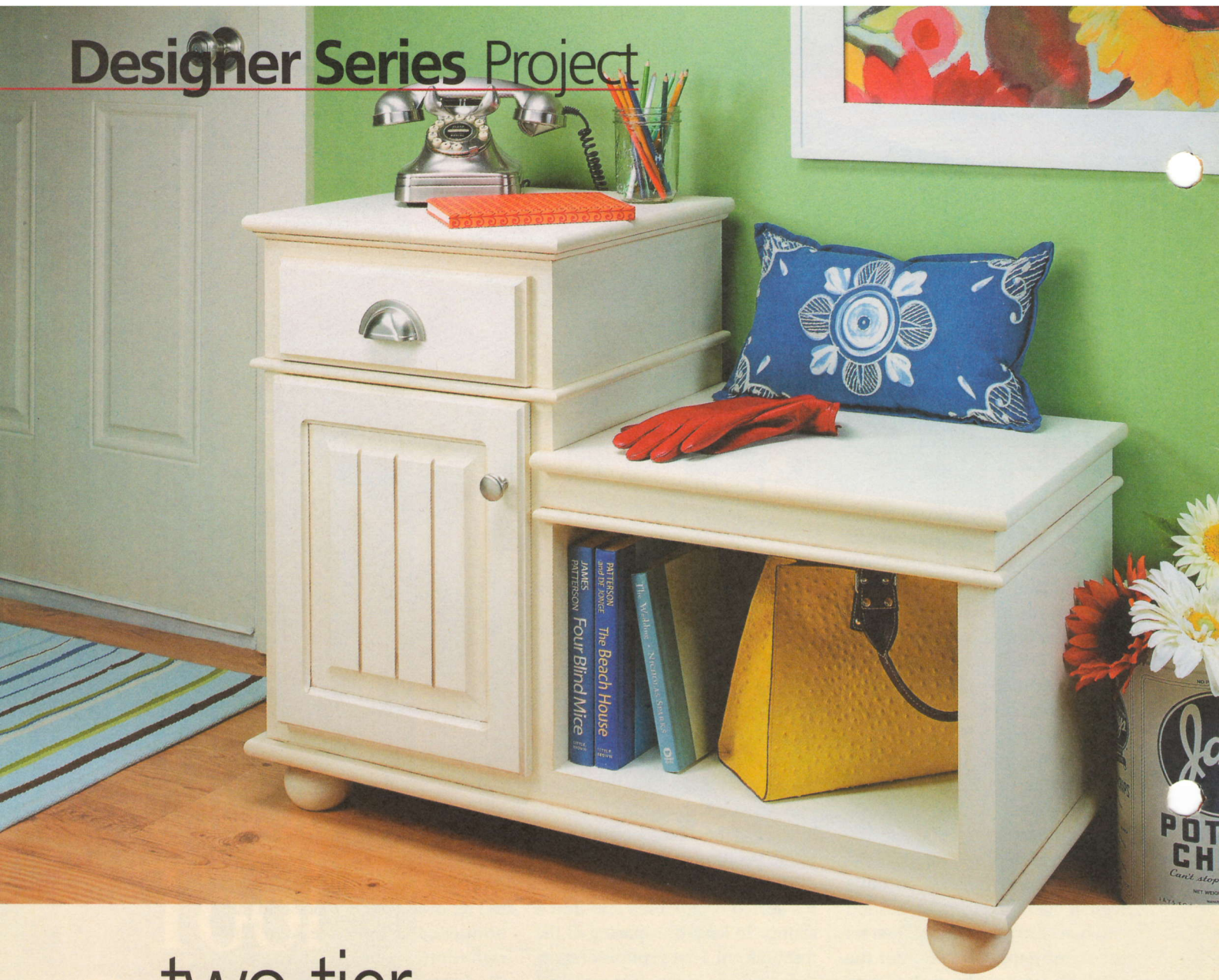

two-tier Storage Bench

This bench takes storage and seating to a new level and at the same time offers a convenient place to sit while jotting down a note.

Some benches are little more than a place to sit. But this one combines storage with seating. It also blends traditional and modern design and construction techniques.

The bench is inspired by a traditional telephone stand with a seat on one side and a handy raised cabinet on the other. Although it might not get much use as a telephone stand these days, I think you'll find it's a great bench with practical storage built in.

The case is built from plywood with tongue and dado joinery, so it goes together quickly from the start. The face frame is assembled with pocket screws that add to the fast build. The case rests on stylish pre-made bun feet. Then you can add the details, like the shop-made molding and edging to cover the plywood.

Although the drawer and door are built with conventional joinery, there's a new twist on the raised-panel door. It's made with a great technique on the table saw. The traditional and modern come together in a solidly built cabinet.

Large bullnose edging covers top and seat edges

Drawers assembled with tongue and dado joints

Cove profile on drawer complements door panel

Top and seat attach with pocket screws

Back ledgers add support to seat and top

Beadboard plywood closes back of cabinet

Euro-style hinges allow for easy installation of door

Raised panel door with cove is cut on the table saw (See technique article on page 16)

Frame and panel door assembled with stub tenon and groove joinery

Face frame assembled with pocket screw joinery

Purchased bun feet attach with dowel screws

Shop-made molding enhances case

CONSTRUCTION DETAILS

OVERALL DIMENSIONS: 28⅛"T x 37½"W x 16¾"D

FRONT SECTION VIEW

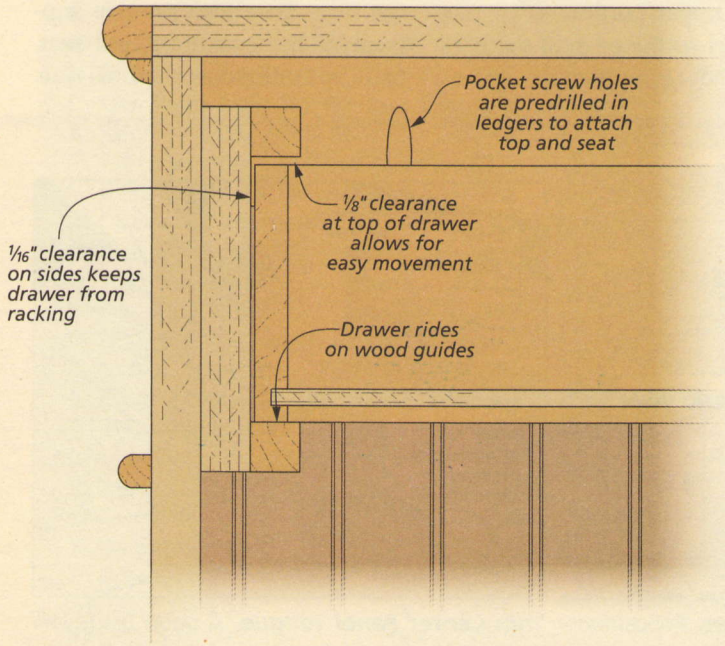

SIDE SECTION VIEW

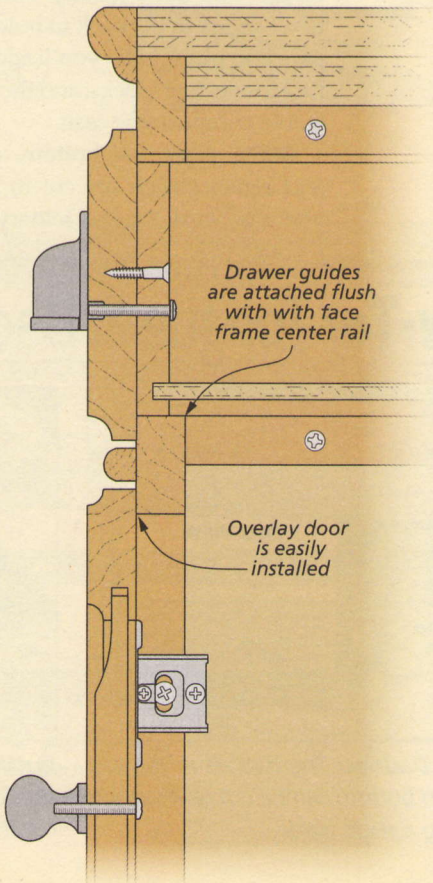

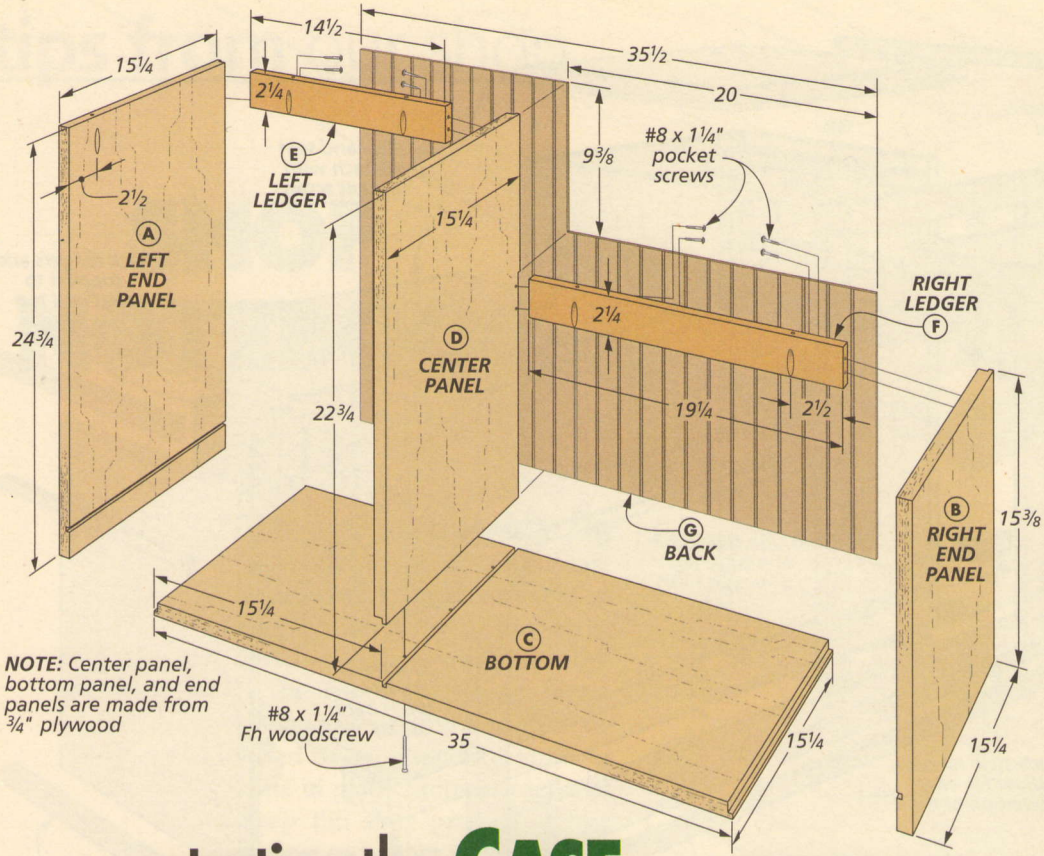

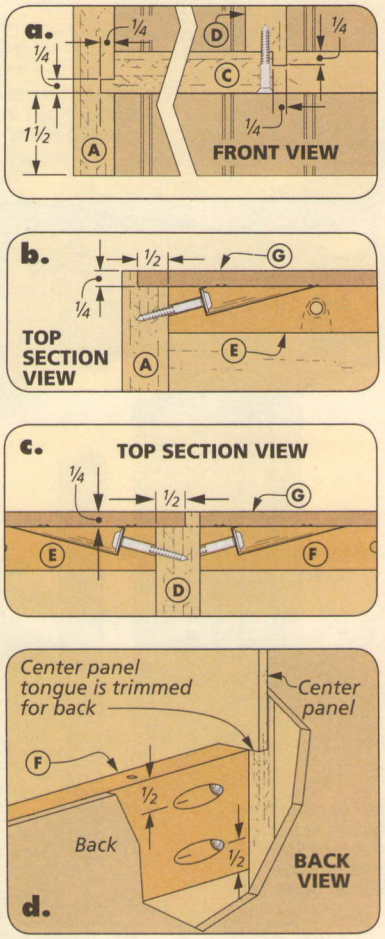

starting the CASE

The case is simply a bottom, a center panel, and two end panels. The center fits into a dado in the bottom and then the ends are attached with tongue and dado joinery. I added two ledgers in the back to hold the panels in place. Later you'll add the face frame, foot blocks, and the bun feet to complete the case.

JOINERY. After the bottom, end, and center panels are cut to size, you can work on the joinery for the case. All of the dadoes are cut with the same saw setup, as are the tongues and rabbets (box below). The rabbet that holds the back, as shown in details 'b' and 'c,' needs to be trimmed on the lower portion of the center panel (lower right drawing). This will allow the back to lay flat on the case. I left the upper portion of the rabbet intact so the edge of the back didn't show from the side.

POCKET HOLES. Once the tongues and dadoes are complete, you can drill holes for the pocket screws. There's just one hole in each of the panels. The remaining holes for the screws that hold the top and seat are drilled in the ledgers.

LEDGERS. The ledgers help hold the panels in place and strengthen the case. They also provide support for the back, top, and seat. Start by cutting them to final size.

How-To: Tongue & Dado

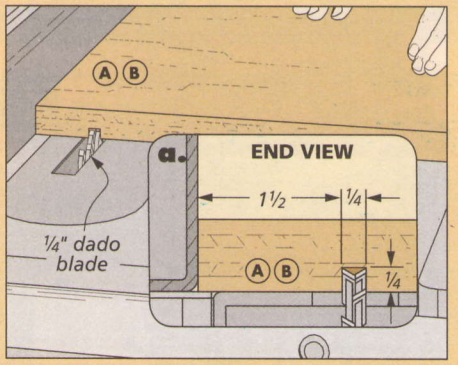

Cutting Dadoes. *The dadoes in the end panel and bottom can be cut on the table saw using a dado blade.*

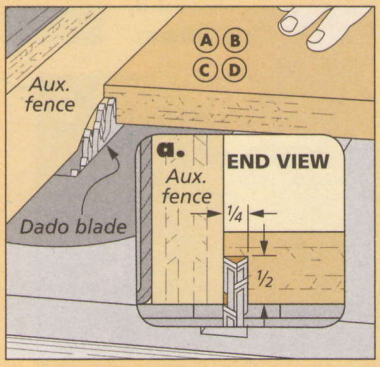

Cutting the Tongues. *Reposition the fence and the blade height to cut the tongues on the panels.*

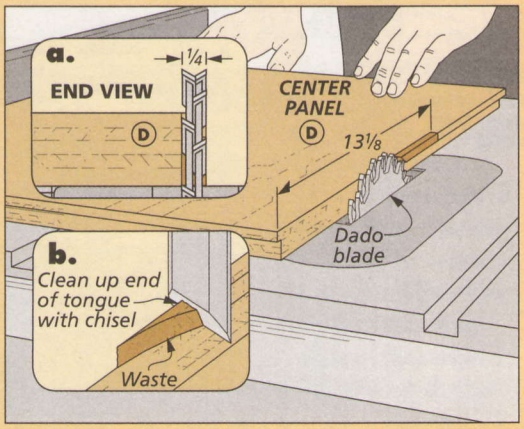

Trim Center Panel Tongue. *A dado blade will remove the waste from the tongue. Then you can use a chisel to clean up the corner (detail 'b').*

Then you can drill a pair of pocket holes in each end of the ledgers. These hold the ledgers in place between the panels. Another set of pocket holes are drilled in the face of the ledgers. These are used to attach the seat and top.

BACK. The back helps square up the case and enclose the back. It's cut from beadboard plywood in an L-shape. You cut most of it on the table saw and then finish up the corner cut with a chisel.

CASE ASSEMBLY. Now that all the workpieces are ready, you can go ahead and assemble the case. I glued and screwed the center panel in place first, taking care to square it with the bottom panel. Then you can glue the end panels in place and screw the ledgers to the panels. Finally, add the back to square up the case.

FACE FRAME. I built the face frame from hardwood. You can cut each piece to width and length and then assemble the frame using pocket screws (details 'b' and 'c'). After you assemble the frame, you can glue it to the case.

FEET. I purchased bun feet for the bench (refer to Sources on page 51 for more information). They're mounted in the corners of the case using dowel screws. Common 2x4s cut to fit under the bottom provide depth to hold the screws.

After the foot blocks are cut to size, you can attach them to the underside of the case with woodscrews (box below). They'll fit snugly under the case.

To position the feet, I first drilled a hole for the dowel screw in the center of the foot, as shown in the left drawing below. Use a brad point bit so the holes are accurate. And clamp the foot in your bench vise. Then I drove the dowel screw in the foot using my handheld drill (center drawing, below). You can mark the placement for each foot, as shown in the right drawing below. Finally, carefully thread the screw into the blocks, making sure the foot remains straight.

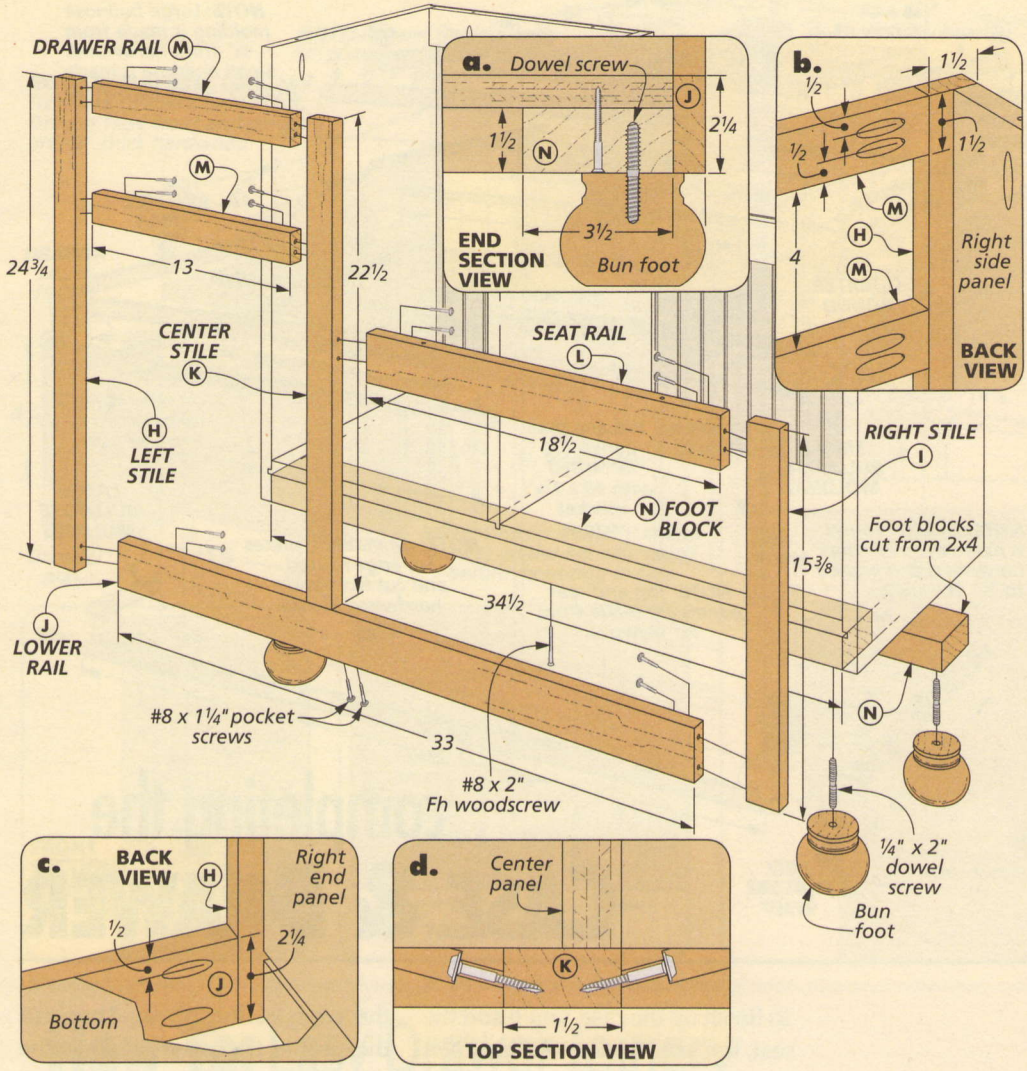

Dowel Screws

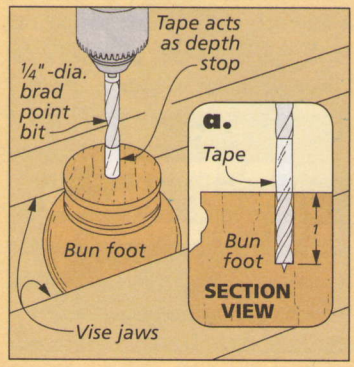

Pilot Hole. *Clamp the bun foot in a vise and drill a pilot hole centered on the bottom.*

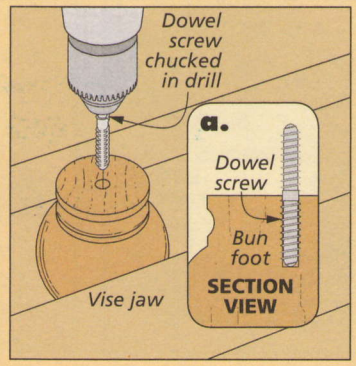

Drive Dowel Screw. *The dowel screws are easily driven in the feet with a handheld drill.*

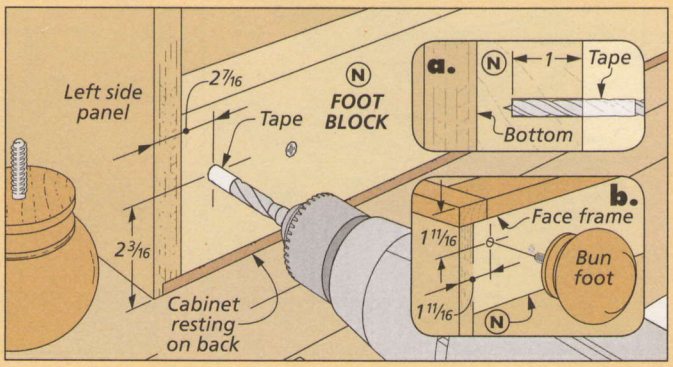

Pilot Holes. *Once the foot location is marked, you can drill the pilot hole with a brad point bit. Then screw the foot in the predrilled hole, keeping it straight as you go.*

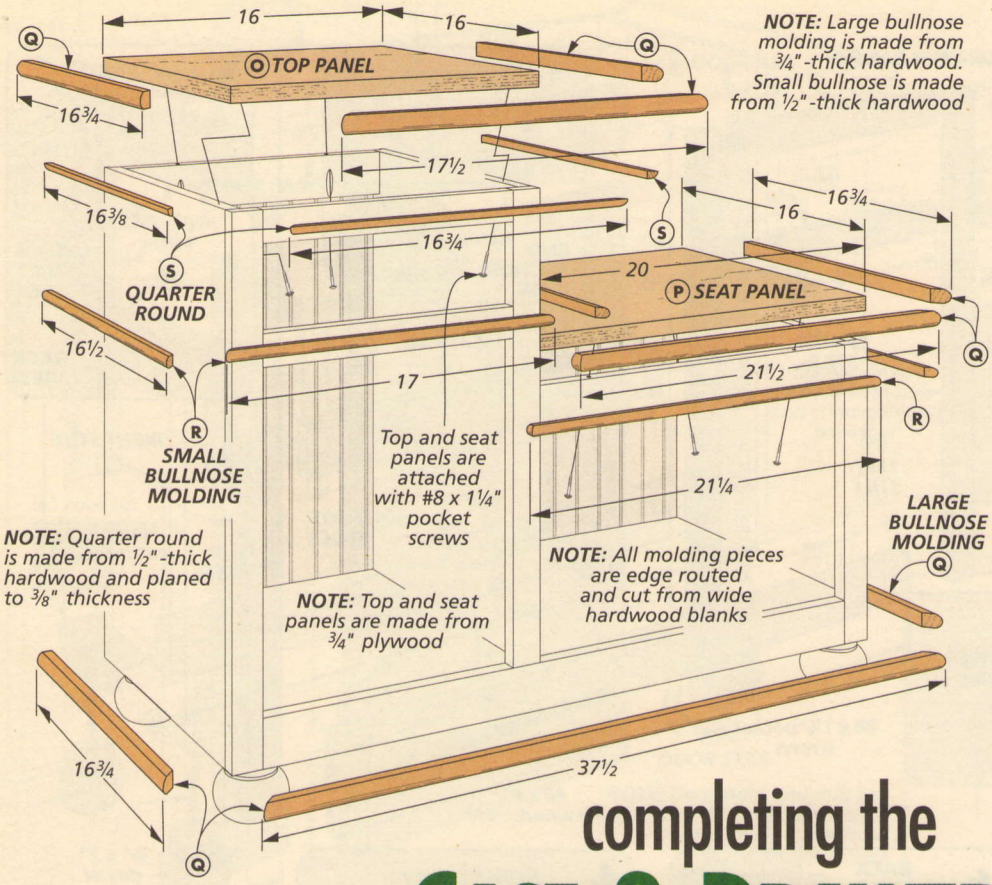

NOTE: Large bullnose molding is made from ¾"-thick hardwood. Small bullnose is made from ½"-thick hardwood

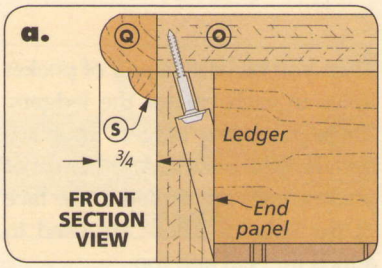

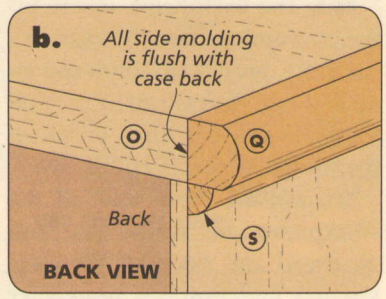

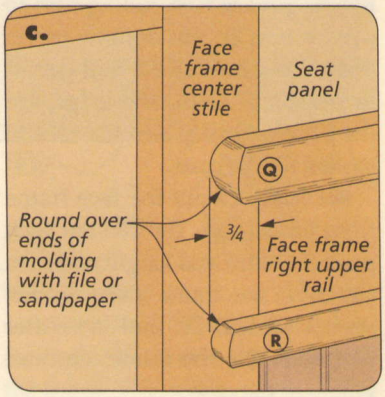

completing the CASE & DRAWER

To finish up the case, you'll add the seat, top, and some molding. Then you can build the drawer and the guides that the drawer rides on.

MOLDING. There are three different molding profiles for the bench. I found it easier to make all the molding at one time. The box below shows the setups for each profile. You can use a wide blank to rout all three moldings. Just rout the edge of the blank. Then cut the profile free after sanding the edges smooth. The quarter round molding has the same radius as the large bullnose, so there's no need to change the router bit. You just need to adjust the height of the bit. The third profile — a smaller bullnose — is routed using a smaller roundover bit. Once the moldings are ready, you can set them aside and cut the panels for the top and seat.

TOP. The top is nothing more than a plywood panel cut to size. The large bullnose molding wraps around the front edge and sides of the panel. To do this, you can miter the front piece first. Then miter the side pieces to fit and cut them

How-To: Rout Three Simple Molding Profiles

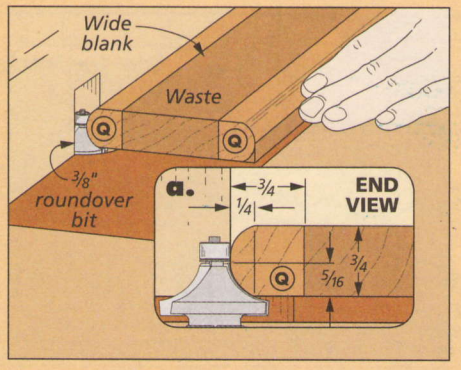

Large Bullnose. *Shape the molding for the lower edge of the case on an extra-wide blank. Then cut it free.*

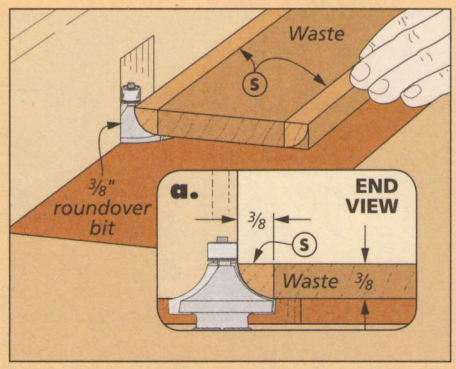

Quarter Round. *The same bit is used to rout the quarter round molding as for the large bullnose; just raise the bit.*

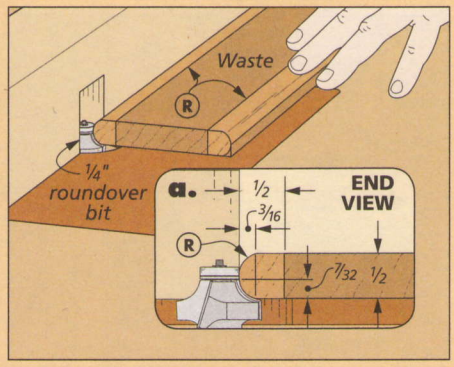

Small Bullnose. *A smaller bit is used to shape the small bullnose molding. Once the profile is routed, cut it free.*

to length. Since the plywood is slightly thinner than the molding be sure to place the bullnose flush with the top of the panel. After gluing on the edging, you can attach the top to the case using pocket screws in the pre-drilled holes at the back and sides. I used glue to hold the front edge in place.

QUARTER ROUND. Now that the top is in place, the quarter round molding will fit under the bullnose. This molding can be cut to fit in the same way as the bullnose. Then just glue it in place.

SEAT. The seat is also just a plywood panel. But the molding is added after the seat is attached. This is because the front molding extends over the face frame (detail 'c,' opposite page). After the seat and top are in place, attach the lower molding, as shown in the main drawing on page 26.

DRAWER

Once the case is complete, you can turn your attention to the drawer. The drawer is just a box with a false front. It rides on shop-made drawer guides. I made the guides first and fit the drawer to them.

GUIDE ASSEMBLY. The drawer guide assemblies are built from a filler block and two guides. After you cut the workpieces to size, you can assemble the guides and attach them from the inside of the case (main drawing). The bottom guide is flush with the divider rail.

DRAWER. I built the drawer with tongue and dado joinery and added a groove to hold the plywood bottom. The drawer is sized to fit the opening with a 1/16" gap on either side of the drawer and a 1/8" gap at the top. The drawer joinery is shown in the box on the right. After the joinery is complete, assemble the drawer.

FALSE FRONT. I made the false front larger than the drawer opening to act as a stop. The front is cut to size and then your next step is to rout the cove around the edges. Center the front on the drawer and attach it with screws (detail 'c'). Finally, you can attach the drawer pull with extra long screws.

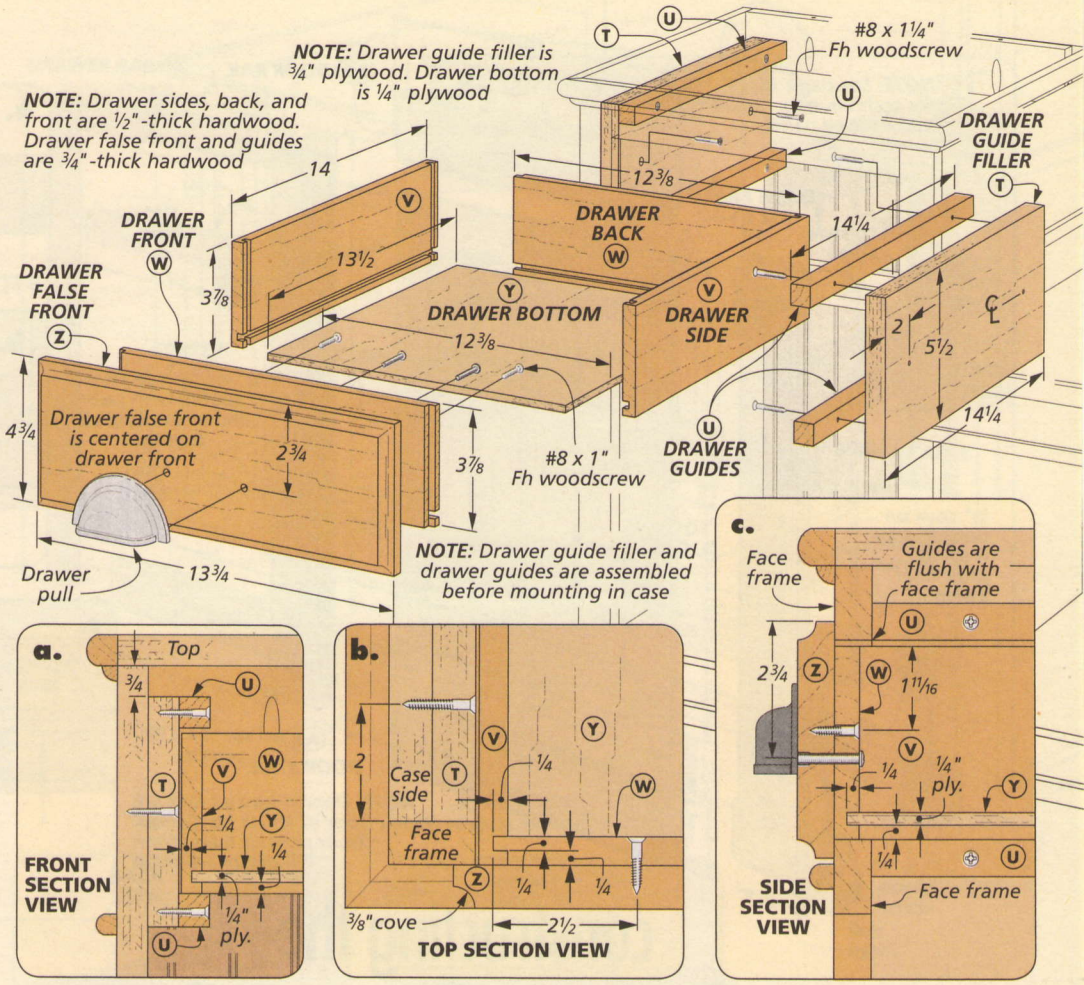

How-To: Easy Drawer Joinery

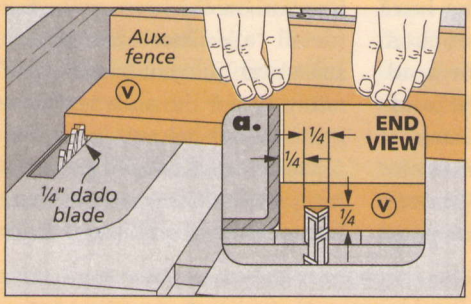

Side Dado. *Cut the dadoes in the drawer sides first. A dado blade in the table saw will make short work of this task.*

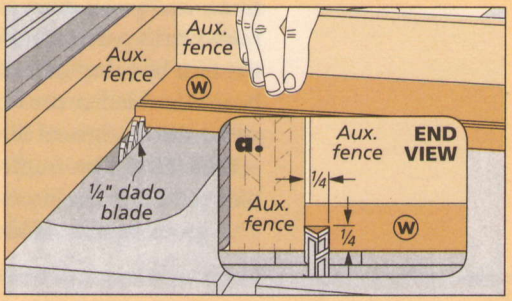

Tongues. *Bury the dado blade in an auxiliary rip fence to cut the tongues. Use a fence on the miter gauge to back up the cut.*

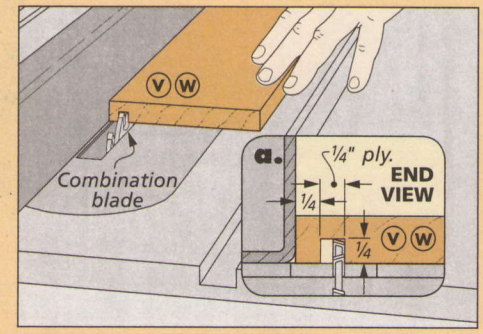

Bottom Groove. *Before assembling the drawers, cut a groove in each piece to hold a plywood drawer bottom.*

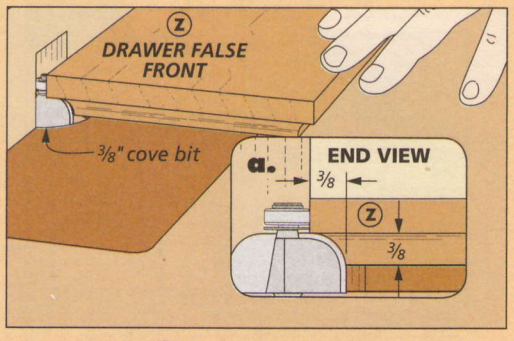

Drawer Profile. *Rout the end grain of the drawer front before you rout the long edges. This way, you'll avoid tear out at the corners.*

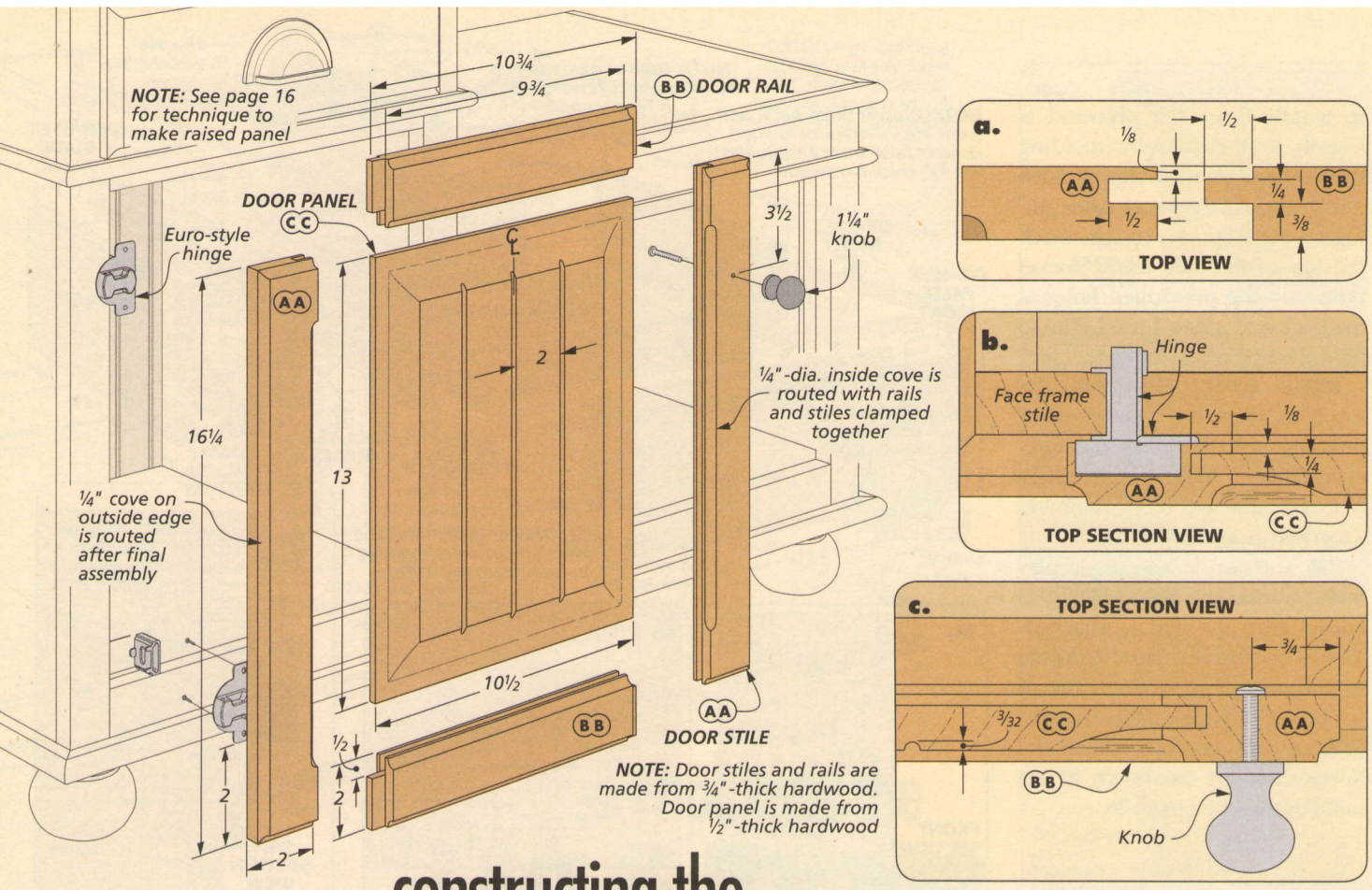

constructing the RAISED PANEL DOOR

The final part for the bench is the frame and panel door, which has a raised cove panel and flutes cut in the face to complement the beadboard. I added coves to the inside and outside edges of the frame.

DOOR FRAME. The frame is assembled with stub tenons and grooves. The grooves that hold the panel are offset to keep thje panel centered on the thickness of the frame (detail 'a'). Once you have the stiles and rails cut to size, you're ready to cut the stub tenons and grooves (box below).

There are a couple of steps to complete before you assemble the frame. First, you'll need to rout a cove around the inside edge of the frame. To do this, I dry clamped the frame. This will avoid the need to make stopped coves at the corners. You can clamp the frame together and then rout the cove on the router table. I put filler strips in the grooves to bearing on the bit from slipping into the grooves (refer to box, opposite page).

DOOR PANEL. The door panel has a wide cove detail. Normally, this is done with a

How-To: Stub Tenon & Groove

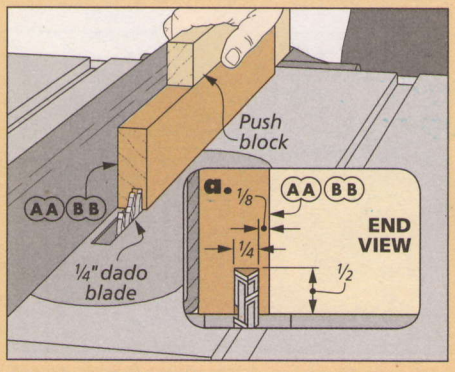

Grooves. *The offset grooves in the stiles and rails that hold the door panel can be cut with a dado blade on the table saw.*

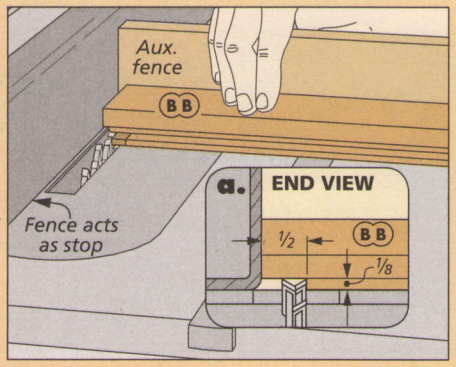

Offset Stub Tenon. *Lower the dado blade to make the first cut for the stub tenons on the ends of the rails.*

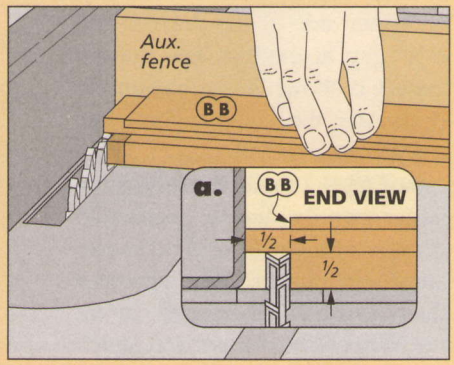

Second Cut. *The blade is raised to make the second and final cut for the stub tenons. Sneak up on the cut for a tight fit.*

shaper or on a router table. But take a look at the article on page 16 for a great technique to cut this profile on the table saw.

After gluing up a blank for the panel, you can cut it to size and then make the cove and flutes on the face of the panel. The flutes are also covered on page 16.

ASSEMBLY. Now that the panel is shaped, you can assemble the door. Just glue up the frame, leaving the panel to float in the frame. This will allow for wood movement in the panel.

OUTSIDE COVE. The final step to complete the door is to rout the cove on the outside edge. I did this on the router table, as shown in the box at right. If you rout the top and bottom first, you can clean up any tear out on the stiles when you rout the long sides. Then you can attach the door to the case with Euro-style hinges (detail 'b'). There's more information about using Euro-style hinges in Shop Notebook on page 30. Finally the door knob is attached to the door (detail 'c,' opposite page).

All that's left is the finish. I painted the bench and added a coat of glazing stain to give it a warm glow. To read more about the colors I chose for the bench, refer to Sources on page 51.

Now that you've completed the bench, you just need to find a convenient place in your home where you need more storage. I found the back door entrance a great place. This way I have convenient place for things I need by the door. W

▲ For a great technique to cut the raised panels, refer to the article on page 16.

How To: Rout Coves

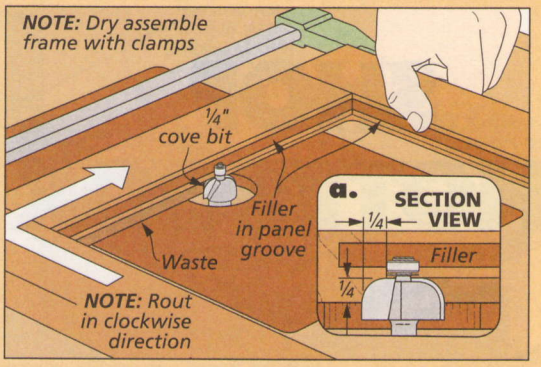

Inside Cove. *Thin strips of scrap wood wedged in the groove will provide a surface for the bearing to ride on as you rout the cove.*

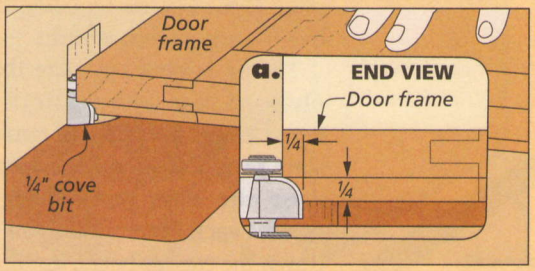

Outside Cove. *Rout the outside cove after the door is assembled. The face of the door lays against the router table to rout the cove.*

Materials, Supplies & Cutting Diagram

A	Left End Panel (1)	¾ ply. - 15¼ x 24¾
B	Right End Panel (1)	¾ ply. - 15¼ x 15⅜
C	Bottom Panel (1)	¾ ply. - 15¼ x 35
D	Center Panel (1)	¾ ply. - 15¼ x 22¾
E	Left Ledger (1)	¾ x 2¼ - 14½
F	Right Ledger (1)	¾ x 2¼ - 19¼
G	Back Panel (1)	¼ ply. - 35½ x 24¾
H	Face Frame Left Stile (1)	¾ x 1½ - 24¾
I	Face Frame Right Stile (1)	¾ x 1½ - 15⅜
J	Face Frame Lower Rail (1)	¾ x 2¼ - 33
K	Face Frame Center Stile (1)	¾ x 1½ - 22½
L	F. Frame Seat Rail (1)	¾ x 2¼ - 18½
M	Face Frame Drawer Rail (2)	¾ x 1½ - 13
N	Foot Blocks (2)	1½ x 3½ - 34½
O	Top Panel (1)	¾ ply. - 16 x 16
P	Seat Panel (1)	¾ ply. - 16 x 20
Q	Large Bullnose Trim (1)	¾ x ¾ - 162 rgh.
R	Small Bullnose (1)	½ x ½ - 90 rgh.
S	Quarter Round (1)	⅜ x ⅜ - 54 rgh.
T	Drawer Guide Filler (2)	¾ ply. x 5½ - 14¼
U	Drawer Guides (4)	¾ x ¾ - 14¼
V	Drawer Sides (2)	½ x 3⅞ - 14
W	Drawer Front/Back (2)	½ x 3⅞ - 12⅜
Y	Drawer Bottom (1)	¼ ply. - 12⅜ - 13½
Z	Drawer False Front (1)	¾ x 4¾ - 13¾
AA	Door Stiles (2)	¾ x 2 - 16¼
BB	Door Rails (2)	¾ x 2 - 10¾
CC	Door Panel (1)	½ x 10½ - 13

- (4) 3⅜-dia. Bun Feet
- (4) ¼" x 2" Dowel Screws
- (1 pr.) Euro-style hinges w/Screws
- (1) Moon Pull w/Screws
- (1) 1¼"-dia. Knob w/Screws
- (10) #8 x 1¼" Fh Woodscrews
- (6) #8 x 1" Fh Woodscrews
- (6) #8 x 2" Fh Woodscrews
- (33) #8 x 1¼" Pocket Screws

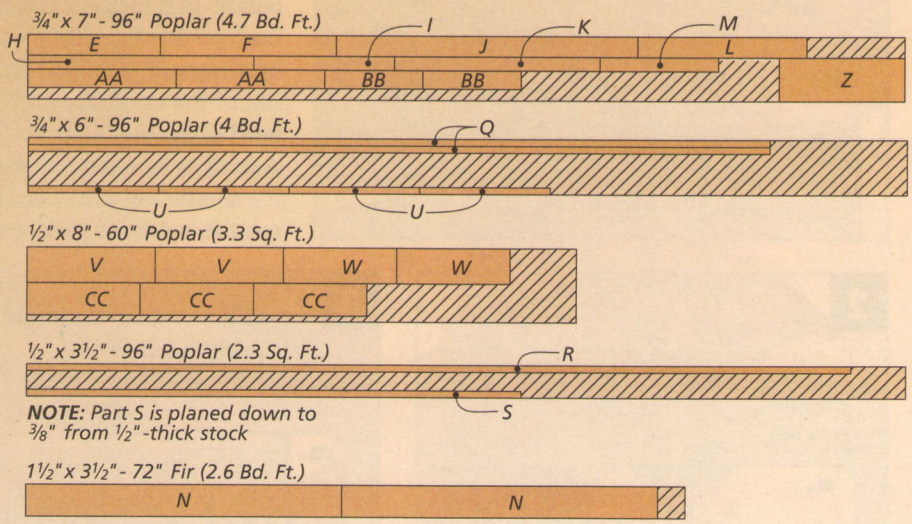

ALSO NEEDED: *One 48" x 96" sheet ¾" Birch Plywood*
One 24" x 24" sheet ¼" Birch Plywood
One 48" x 48" sheet ¼" Beadboard Plywood

SHOP NOTEBOOK

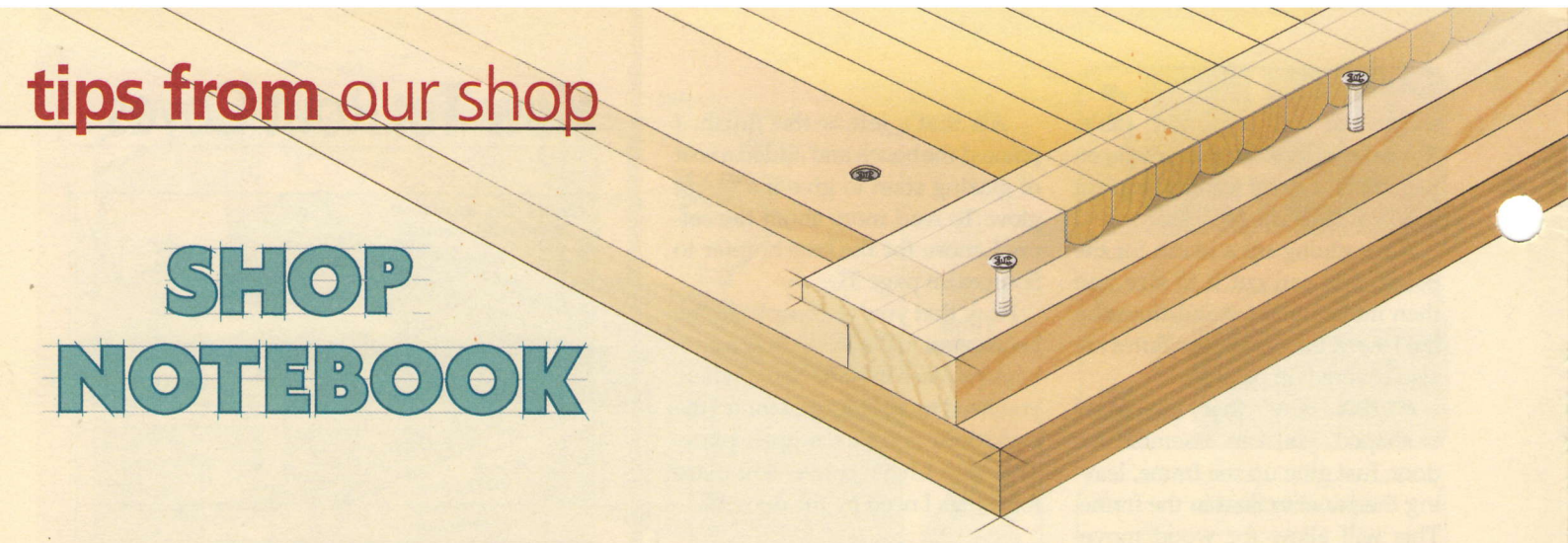

Tambour Assembly Jig

You can make assembling the tambour door for the tool cabinet on page 32 a lot easier by using an jig like the one shown at right.

The jig is nothing more than a plywood base with a pair of rabbeted cleats to hold the tambour slats in place. Stops at each end keep the slats pressed tightly against each other while you glue down the canvas backing.

When making the jig, start by attaching the fixed stop flush with one end of the base. Then attach the fixed cleat on one side of the base, making sure it's square to the stop. This will ensure that your tambour ddor ends up square.

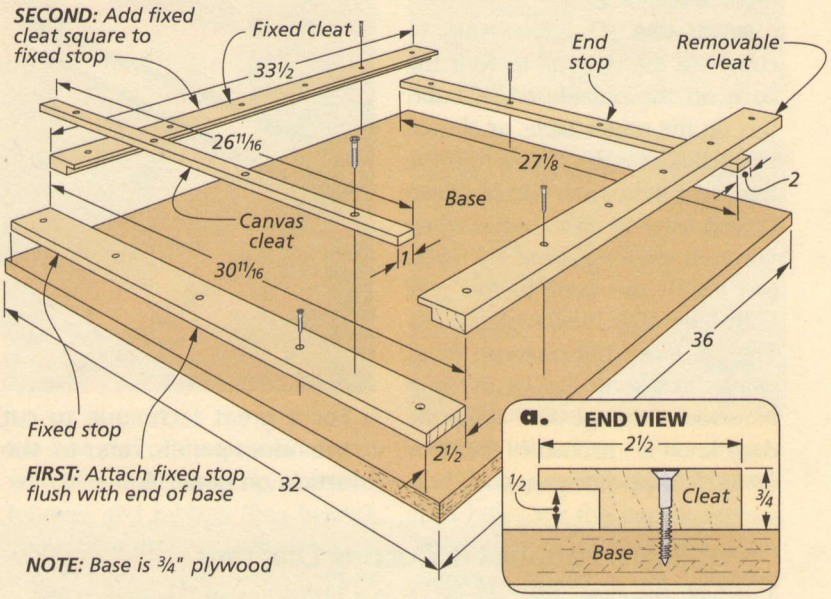

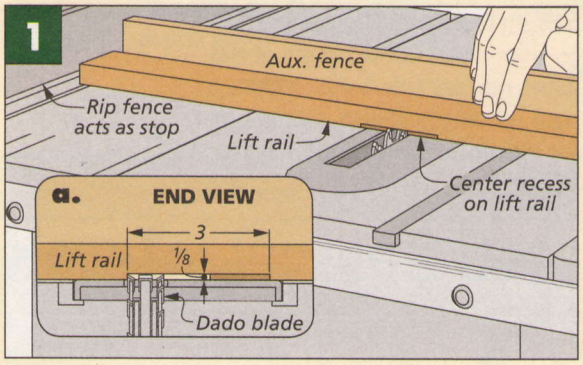

Chest Handle Mortise

The tambour door of the tool cabinet is raised and lowered with a handle that matches the ring pulls used on the drawers. This piece of hardware is recessed into the lift rail of the door. To do this, you'll need to create a "stepped" mortise. A shallow recess holds the plate of the handle and a deeper, U-shaped mortise holds the main body.

I found it easiest to make the mortise on the lift rail before cutting the rest of the joinery and assembling the door. To start with, I cut a wide, shallow dado, centered on the front of the rail, as shown in Figure 1.

Next, I removed the bulk of the waste for the deeper mortise by drilling a series of overlapping holes with a couple different sizes of Forstner bits. You can see how this is done in Figures 2 and 3.

Finally, I squared up the edges of the mortise with a chisel. The key here is to pare away the waste a little at a time, frequently checking the fit of the handle in the recess.

Note: When you cut the rabbet in the back of the lift rail for the connecting rail, you'll cut through the bottom of the handle mortise. But this won't affect the fit of the handle or the strength of the rail.

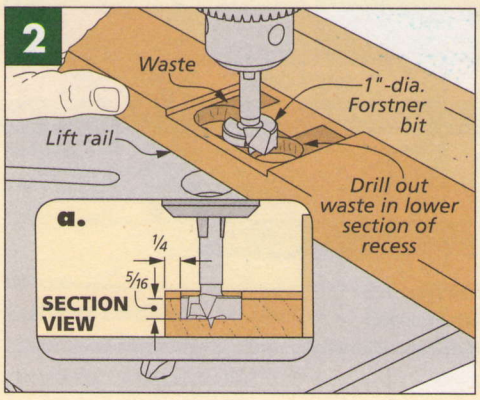

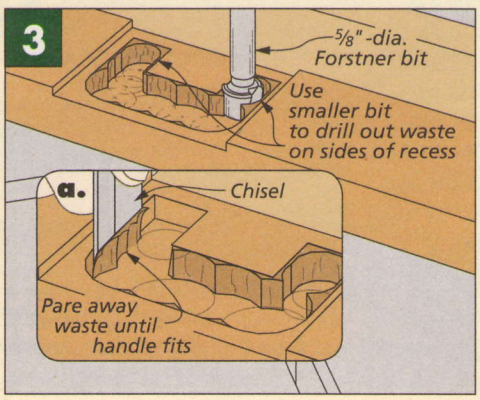

Concealed Hinges

The storage bench on page 22 features an overlay door. To attach the door to the case, I used concealed, or "Euro-style" hinges. One of the benefits of these hinges is that they have a built-in adjustment feature. Once the hinges are installed, you can adjust the door up or down, or in or out, by turning a few screws.

But the adjustability won't take care of everything. You still need to be in the ballpark when you initially install the hinges. Fortunately, this isn't difficult.

DOOR INSTALLATION. The first step is to drill a couple of flat-bottomed, 1⅜"-dia. holes on the inside face of the door stile for the "cup" portion of the hinges, as you see in Figure 1. (The hinges should come with installation instructions that tell you how far from the edge of the door to locate the holes.)

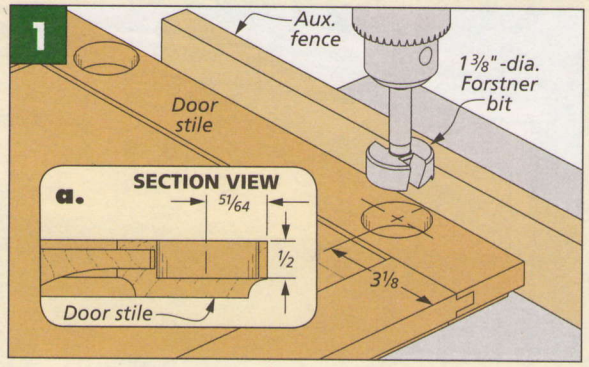

An auxiliary fence on your drill press will back up the door edge and prevent the drill bit from blowing out the side of the hole.

CASE INSTALLATION. The other part of the hinge is simply attached to the edge of the face frame, as shown in Figure 2. Tabs on the hinge help to position it against the face frame stile. Then all you have to do is screw the hinge directly to the edge of the face frame.

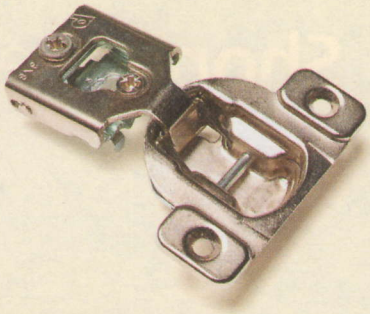

▲ Once installed, this face frame hinge is totally hidden when the door is closed.

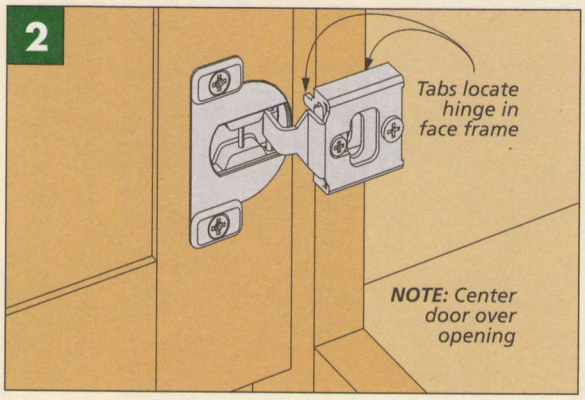

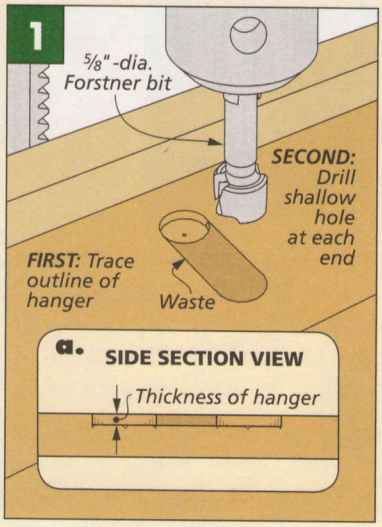

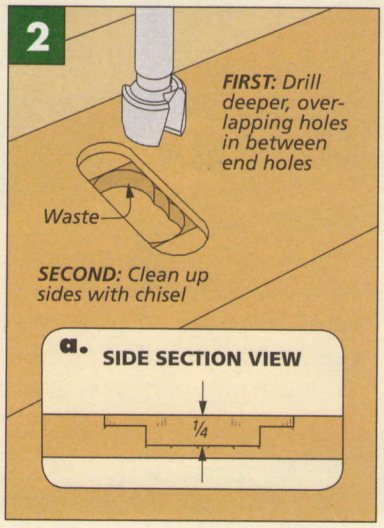

Keyhole Hangers

The mail organizer on page 18 and the tool cabinet on page 32 both use keyholes hangers. These hangers fit over roundhead screws that are attached to the wall.

To install the hangers, start by tracing the outline of the hanger onto your project. Then, drill a shallow hole at each end (Figure 1).

To create a clearance recess for the roundhead screw, drill deeper overlapping holes in between the shallow holes (Figure 2). Then, simply clean up the sides with a chisel and screw the hanger in place.

▲ A keyhole slot allows the hanger to fit over a roundhead screw.

Trivet Assembly

When it came time to assemble the trivet on page 20, I made a simple assembly board to help keep all the pieces aligned. As you can see in the drawing at right, the board is nothing but a plywood base with a cleat attached at each end to keep the ends of the bars flush.

The first step is to glue and clamp the center foot in place. Next, I glued and clamped the two end blocks in place. Finally, to position the other two feet, I cut a spacer block to fit in between the center foot and the foot at each end. W

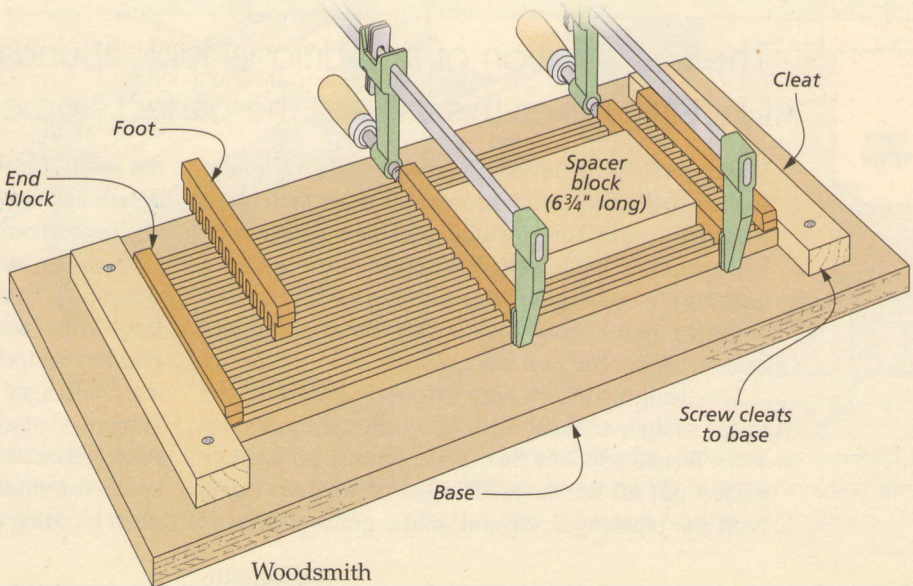

tambour Tool Cabinet

The combination of a traditional look, abundant storage, and unique function makes this cabinet the perfect home for your trusted tools.

Woodworkers can develop a sentimental attachment to their tools. They often become far more than just a means to an end. I own a number of hand tools whose loss would certainly trigger a period of mourning. I guess this is one reason why building a finely crafted home for these special tools, such as the tambour tool cabinet above, can be a labor of love.

The design concept here is loosely based on the much plainer tool cabinets once offered by *Stanley Tools*. But as you can clearly see on this project, we pulled out all the stops. The list of features starts with the pleasing color and subtle grain pattern of the solid, riftsawn red oak. With the simple, tasteful details and the classic hardware, the appearance has ageless craftsmanship written all over it.

However, tool storage is the first and foremost consideration. In this respect, this cabinet has it all. The large upper compartment first grabs your attention. Hidden behind one of woodworking's most interesting challenges — a tambour door — you find convenient, custom storage for all your most used and prized hand tools. The five drawers below provide space for smaller items. You're guaranteed both a great building experience and years of practical use.

Case hangs solidly from keyhole hangers mortised into back

False back panel creates hiding space for tambour and surface for tool storage

Tambour travels in groove routed in side

NOTE: Template routing technique used to form grooves for tambour. See page 44

Tambour entry channel

NOTE: Tambour door offers space-saving way to enclose case

Simple, two-piece molding made at router table

Stem bumpers keep drawers sliding smoothly and centered in openings

NOTE: Article on page 41 details construction of canvas-backed tambour door

Rabbeted tambour hides track grooves

Tambour lift rail

Drawer fronts are wrapped with bead molding for classic look

Thin edging covers case joinery

NOTE: Rift-sawn red oak complements design of case

NOTE: Five graduated drawers offer versatile storage for small tools

Ring pulls mortised flush with drawer fronts

Tongue and dado joints create rigid case

NOTE: See page 51 for sources of supplies

CONSTRUCTION DETAILS

OVERALL DIMENSIONS: 30½"W x 10¼"D x 37¼"H

▲ To protect your tools from dust and damage, the tambour door can be pulled down from its hiding place inside the case.

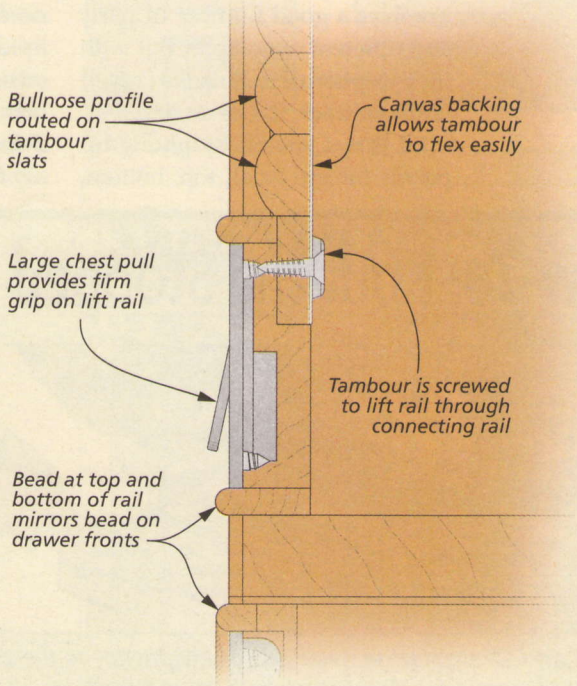

SIDE SECTION VIEW OF TAMBOUR LIFT RAIL

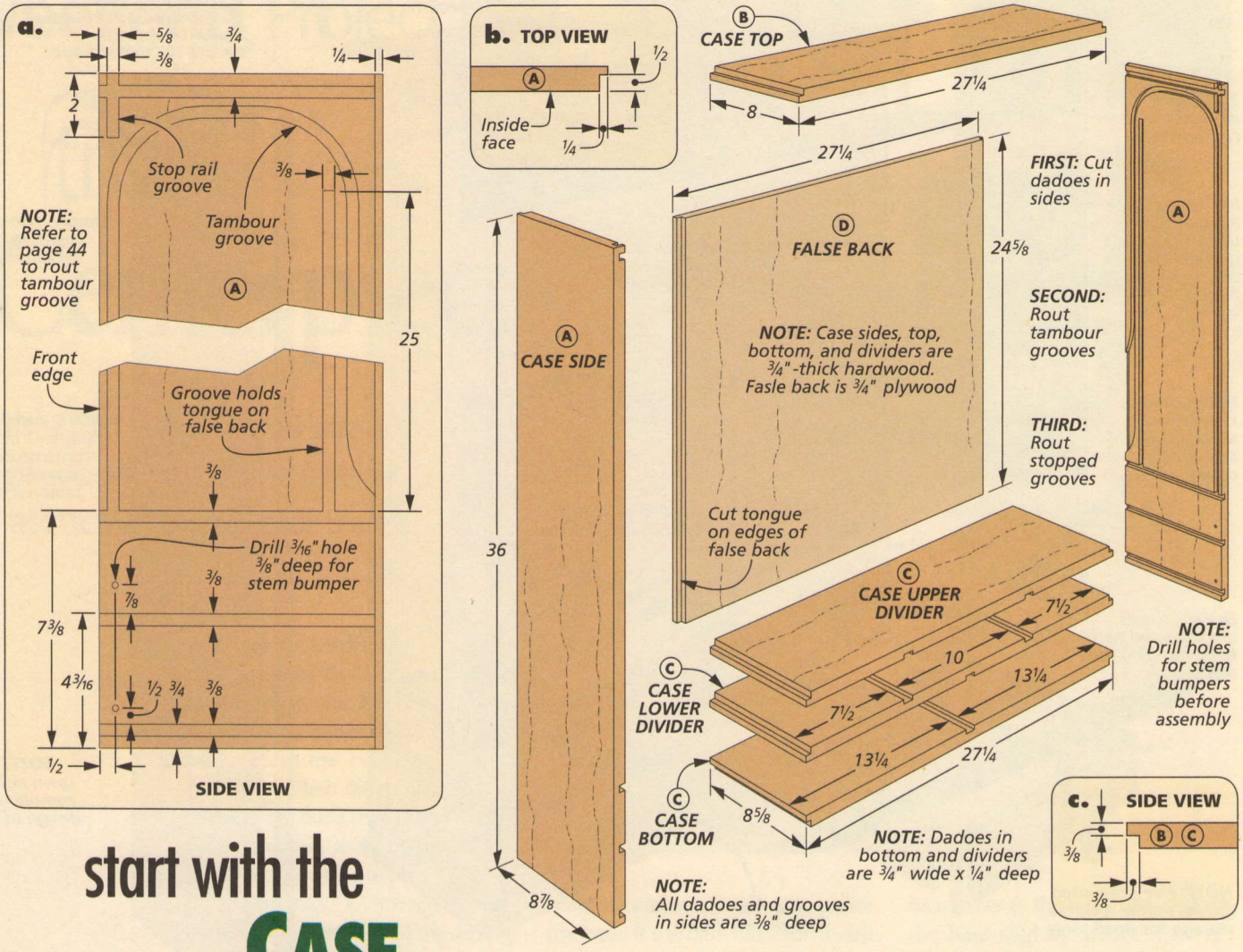

start with the CASE

The construction of the case involves a good number of parts and different operations. But with the exception of routing the curved tambour track, it's all routine.

THE SIDES. I started by gluing up panels for the sides, top, bottom, and dividers. Then I concentrated on the mirror image sides where the bulk of the work lies.

Detail 'a' above shows what needs to be accomplished — multiple dadoes, grooves, and rabbets criss-crossing the panels. The top, bottom, and dividers are captured in four 3/8"-wide dadoes. I made this my first task using a dado blade in the table saw. Once the dadoes were completed, I buried the blade in an auxiliary fence to cut the rabbets for the 1/4" plywood back (detail 'b').

TAMBOUR GROOVES. Next, I took on the challenge of routing the grooves for the tambour door. You'll find that the template routing technique explained on page 44 makes this a manageable task.

How-To: Rout the Stopped Grooves

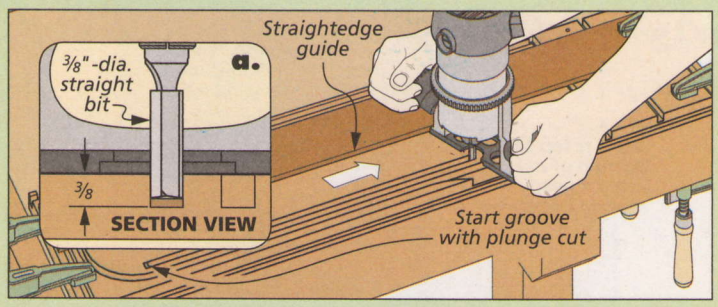

Router and Straightedge. *I clamped a straightedge to the side to rout the stopped grooves for the false back and the stop rail. Rout the grooves in two passes moving from left to right.*

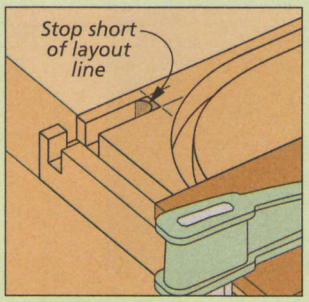

Start and Stop. *I used the same technique to rout the short stopped grooves.*

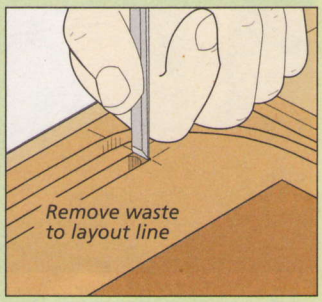

Square Ends. *Finally, use a sharp chisel to square up the rounded ends of the cuts.*

TWO MORE GROOVES. With the tambour grooves completed, you now have two sets of stopped grooves to rout. A short groove in the upper, front corner of each panel holds the tambour stop rail. A longer groove just inside the tambour grooves is for the ¾"-plywood false back that hides the open tambour. The How-To box on the opposite page has more on this.

TOP, BOTTOM, & DIVIDERS. After drilling a pair of stem bumper holes in each side, you can start work on the top, bottom, and dividers. Once these parts are cut to size, there are essentially only two things to do — both at the table saw with a dado blade. First, I rabbeted the ends to form tongues to fit the dadoes in the case sides (detail 'c' on the opposite page). Then you'll need to cut dadoes in the case bottom and two dividers to hold the vertical dividers that form the drawer openings.

FALSE BACK. After making the false back, you can glue the completed pieces together. Like the dividers, a tongue joins this panel to the sides. Just make sure the shoulder-to-shoulder width matches the inside width of the case.

VERTICAL DIVIDERS. Now with the case partially assembled, you can fit the vertical dividers. When the dividers are ready, add glue to the dadoes, and then slide them into place (details 'c' and 'd').

TAMBOUR STOP RAIL. The tambour stop rail comes next. It fits as shown in details 'a' and 'b' above.

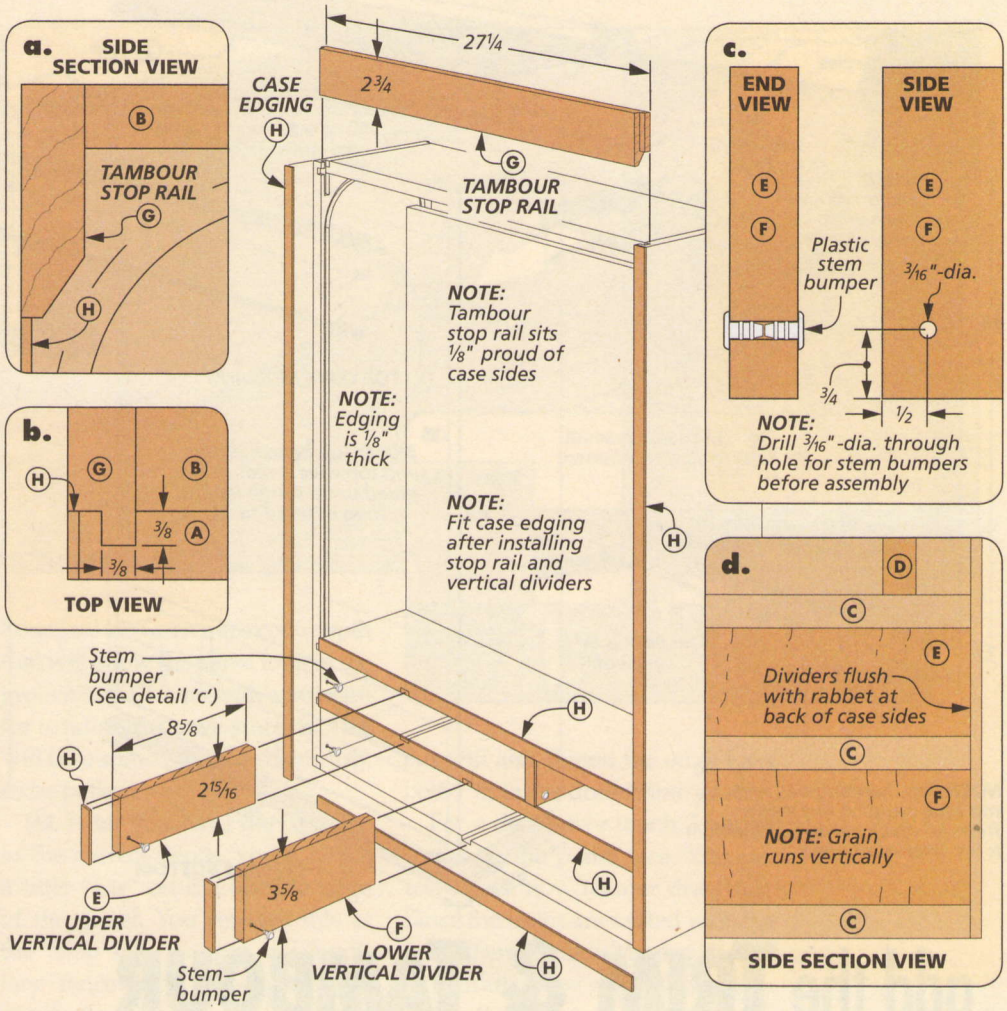

When the tambour is raised fully, the lift rail butts against this piece, stopping its travel. The How-To box below shows how to shape the tambour stop rail. When installed, it should sit ⅛" proud of the case sides in order to "flush out" with the case edging added next.

EDGING. The thin edging I applied covers the joints while being virtually unnoticeable. Starting with strips a hair wider than the edges of the case pieces, I worked from the outside in. First, I fit and glued the two side edging pieces using stiff clamping cauls. Next came the strips for the bottom and horizontal dividers. A slight "spring" fit will ensure an invisible joint line. I finished up with the vertical dividers. And with all the edging in place, I sanded it flush.

Make the Tambour Stop Rail

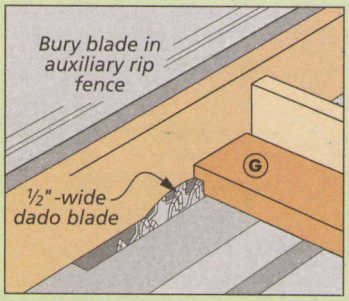

Tongue. *After sizing the rail, cut a rabbet across the front face of each end to form a tongue.*

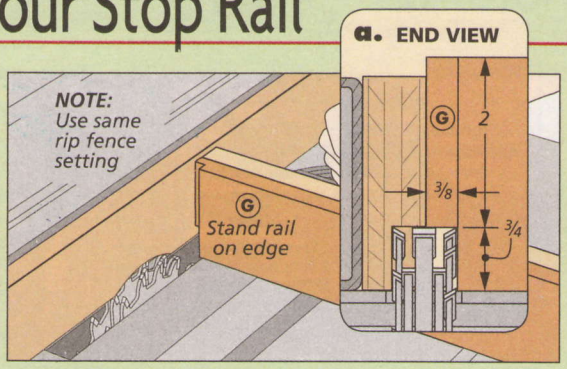

Lower Shoulder. *Next, you'll need to raise the blade to cut a wide shoulder on the lower edge of the stop rail. You can use the same rip fence setting.*

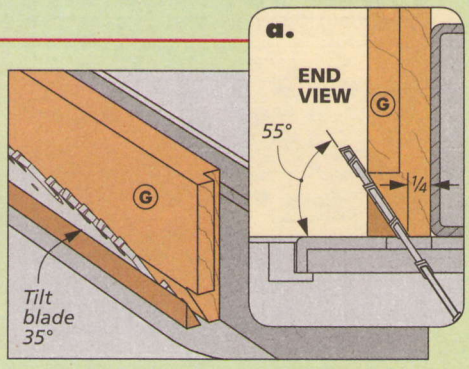

Bevel. *The last step is to bevel the lower, inside edge of the rail to create clearance for the tambour to pass by.*

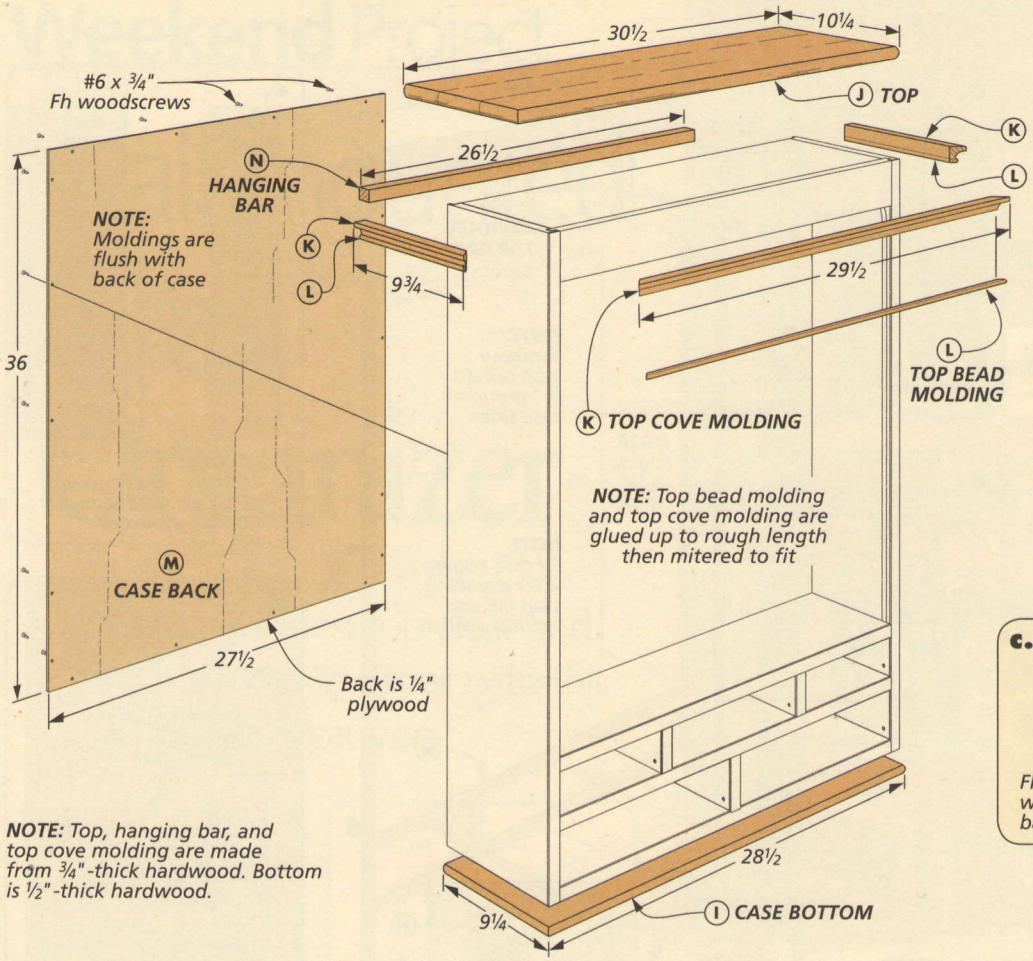

NOTE: Top, hanging bar, and top cove molding are made from ¾"-thick hardwood. Bottom is ½"-thick hardwood.

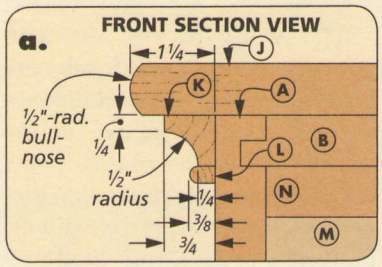

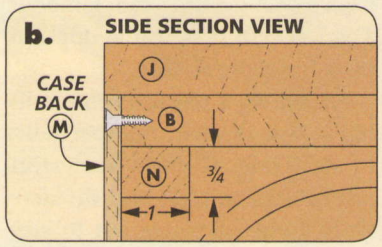

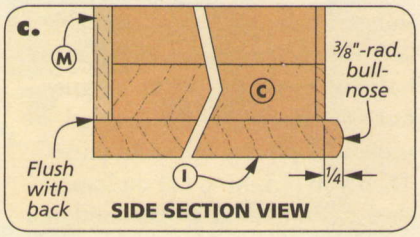

add the TRIM & TAMBOUR

Next, you have a few relatively easy chores to take care of before starting on the slightly greater challenge of building and installing the classic tambour door.

THE TRIM. I dressed up the plain case by adding an overhanging top and bottom and some shop-made top molding, as shown above. The bottom is a ½"-thick panel with a ⅜"-radius bullnose profile routed on three sides (detail 'c'). It's sized to fit flush at the back and overhang the case by just ¼" at the front and sides. When ready, the bottom can be glued to the case.

THE TOP. You'll want to install the top panel before adding the molding beneath it. The ¾"-thick top is sized for a 1¼" overhang at the front and sides. I routed a ½"-radius bullnose on the front and sides before gluing it to the case.

COVE AND BEAD MOLDING. The simple cove and bead molding wrapping the case below the top creates a built-up "crown" effect (detail 'a'). The molding consists of separate cove and bead pieces that are glued together before being mitered to fit. The box below shows how to go about adding the molding.

CASE BACK. In anticipation of adding the tambour and then closing

How-To: Add the Molding

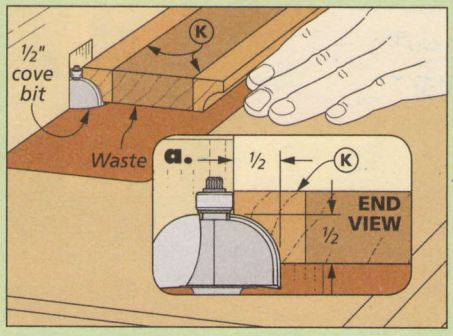

First, the Cove. *Rout a cove profile on both edges of an extra wide blank, then rip the molding to final width.*

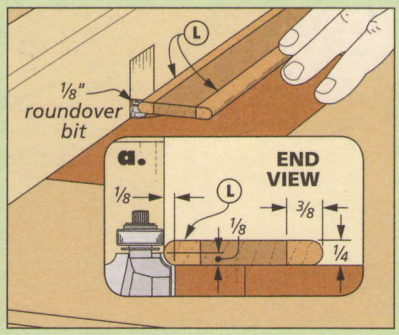

Bead Molding. *You can make the bead molding by routing a roundover on both faces of the blank.*

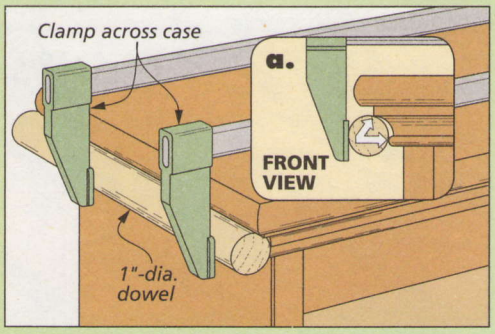

A Clamping Tip. *After mitering the molding to fit, I glued and clamped the pieces using short sections of dowel as cauls.*

up the case, I pre-fit the ¼" plywood back at this point. You'll also need to glue a hanging bar across the top of the case, as in detail 'b' on the opposite page. The back is fastened with countersunk screws so it can be removed if necessary.

THE TAMBOUR DOOR

The concept behind a canvas-backed tambour is easy to grasp. Narrow slats are glued to a heavy piece of canvas. The canvas backing holds the slats together while allowing the whole assembly to flex as it travels around the curved track. A rigid lift rail at the bottom stiffens the tambour and provides space for a handhold. It's definitely a different approach to adding a door, but not hard to do.

TAMBOUR, IN DEPTH. I won't go into the details of shaping the slats and assembling them into a tambour door here. All the information you need to do this is covered in depth in the article starting on page 41. Here, I'll concentrate on making the lift rail and installing the tambour once everything is ready.

LIFT RAIL. The box below shows the steps to making the lift rail. First, a tongue is cut on each end to fit the tambour grooves. The lift rail will be installed in the case by angling or tipping it into the grooves at the front. So before moving on, you'll want to give the rail a test fit.

Next, I cut the mortise for the chest handle in the rail. You'll find details on this task on page 30.

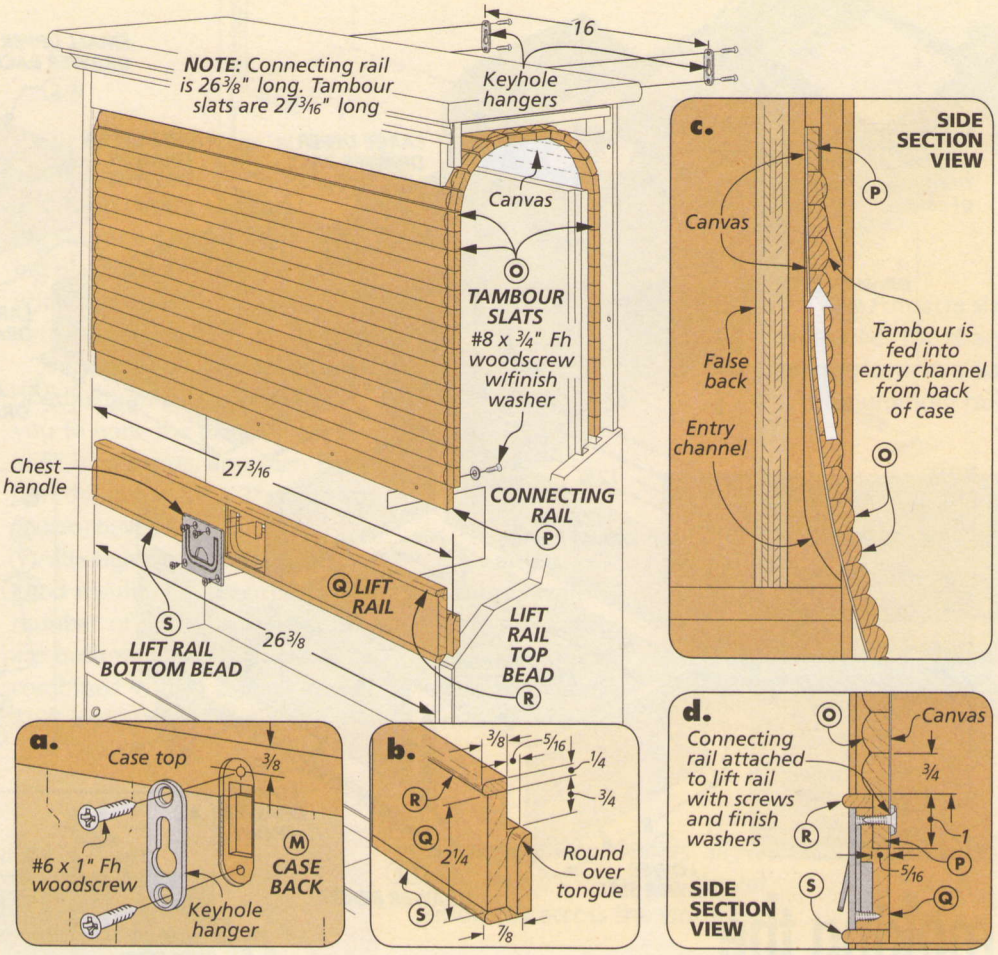

As you can see in the drawing above, the tambour and lift rail are fastened together through a wider connecting rail at the bottom of the tambour. The connecting rail fits into a rabbet you'll cut into the top, back edge of the lift rail.

THE INSTALLATION. After making and gluing the top and bottom beads to the lift rail, I preassembled the tambour. Now you're ready for the moment of truth. The tambour is fed into the groove through the entry channel at the rear. And as I mentioned, the lift rail is tilted into the groove at the front of the case. Then with the lift rail propped up at a height that gives you easy access, snug the tambour up to the rail and re-install the screws.

Now take a few minutes to marvel at the smooth function of the tambour door. Then you can close up the back of the case and mortise in a pair of keyhole hangers, as shown in detail 'a.'

Make the Lift Rail

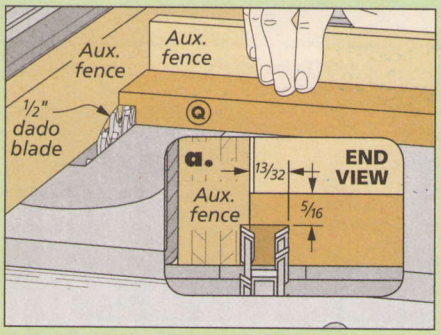

A Loose Tongue. *Once the rail is sized, you'll need to cut a tongue on each end. You want a loose fit in the track groove.*

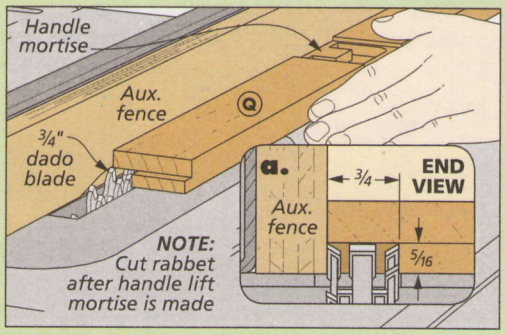

A Rabbet. *With the mortise for the handle completed, I cut a rabbet along the top, back edge to hold the tambour connecting rail.*

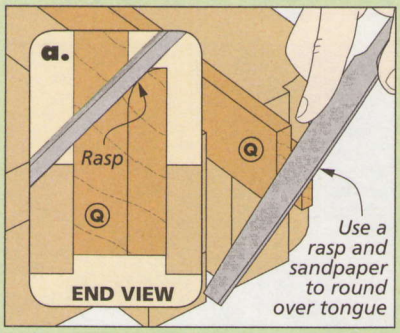

Round the Tongue. *To avoid binding in the curve of the groove, round over the front, top edge of the tongue.*

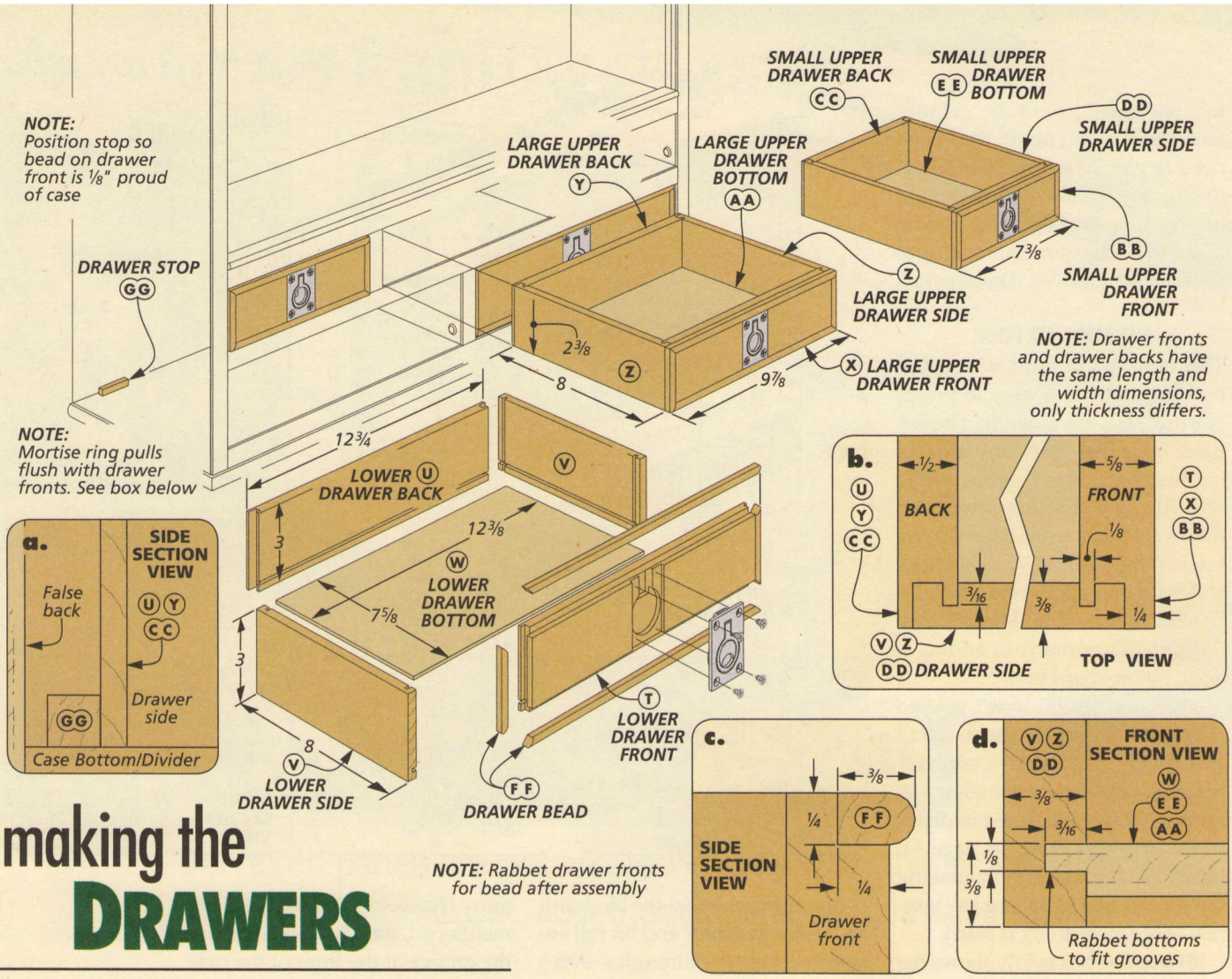

making the DRAWERS

Now, you can start work on filling the lower openings in the case with a set of small drawers. The drawers have a couple of eye-catching features — bead molding wrapping the fronts and flush-mounted ring pulls — that complement the overall appearance of the case. These details, as well as the locking rabbet joinery used on the drawers, provide a modest challenge, but nothing too difficult.

THREE SIZES. The drawers are three different sizes. And the sides, fronts, and backs are all different thicknesses. The drawer fronts are cut from 5/8"-thick stock. I allowed a 1/16" gap at each side and a 1/16" total top to bottom gap. The backs can be cut to the same size from 1/2"-thick stock. The sides came out of stock I planed down to 3/8" thick. So as you cut the parts to size, it will help prevent confusion later on if you label them clearly.

LOCKING RABBETS. With all the parts ready to go, you can start setting up the table saw to cut the locking rabbet joints. Detail 'b' above shows what you're shooting for.

How-To: Install the Ring Pulls

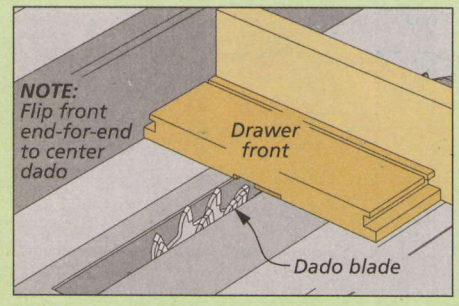

First, a Dado. *The first step is cut a shallow, centered dado in the front, sized to the width and thickness of the pull plate.*

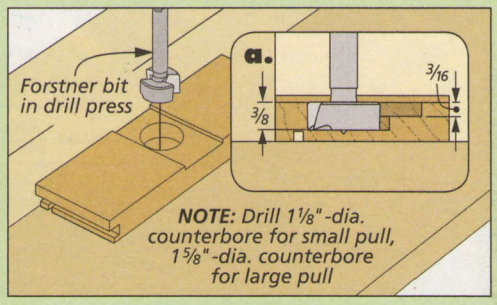

A Counterbore. *Next, you'll need to carefully lay out and drill a counterbore to accommodate the ring cup of the pull.*

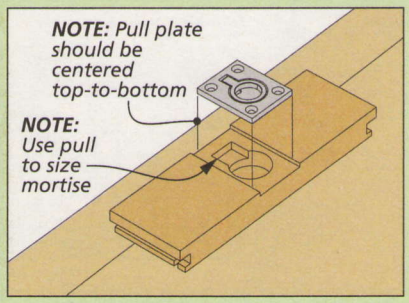

Small Mortise. *The final step is to drill out and square up a small mortise above the counterbore for the ring hinge.*

GROOVES FIRST. Cutting the joinery is a three-step operation. You'll start by cutting grooves across the ends of the fronts and backs. Even though the fronts and backs are different thicknesses, you can use the same setup to cut all the grooves. Just position the rip fence to register against the inside faces of the pieces when making the cuts with the pieces standing on end.

With the grooves completed, I trimmed back their insides faces to form a short tongue. And finally, I cut dadoes (a single kerf) in the sides to mate with the tongues on the fronts and backs.

RABBETED BOTTOMS. Fitting bottoms to the drawers was the next task on my list. As usual, the first step is to cut a groove in the lower inside edge of all the pieces to capture the bottoms. I planned on using ¼" plywood for the bottoms, but I didn't want to compromise the strength of the thin sides with a ¼"-wide groove. My solution was to split the difference.

I cut ⅛"-wide grooves with a single pass across a standard saw blade. Then after cutting the bottoms to size, I rabbeted all four edges to create a ⅛"-thick tongue. You can do this with a standard blade or a dado blade.

FIT THE PULLS. At this point, the drawers are ready to assemble, but it's best to hold off. The ring pulls have to be let in flush with the surface of the fronts and this will be much easier to do before you glue the drawers together.

While the pulls for the upper and lower drawers are different sizes, the installation steps are the same. Each pull requires a three-part mortise. The box at the bottom of the opposite takes page takes you through the process step by step.

You'll want to have the pulls in hand before getting started. I found that they can vary slightly in their dimensions, so a custom fit may be necessary. Take care to center the pull plate top-to-bottom on the front so that the bead molding added next will fit correctly. Then once you've completed the mortises for the pulls, you can glue all the drawers together.

ADD A BEAD. The bead molding mitered around the drawer fronts is a nice complement to the overall appearance of the case. The pieces are simply glued into rabbets cut around the outside of the front.

The box below shows how to go about making and installing the bead. The goal is a flush fit around the outside and a gap-free fit between the pull plate and the bead, as shown in the photo above. For this reason, it works best to cut the rabbets before making the bead. This way, you can size the rabbets to "flush out" with the pull and then tweak the thickness of the bead slightly if necessary.

Once the rabbets are cut and the bead is made, you can miter the pieces to length. I like to work around the perimeter, gluing and clamping each piece as it's fit.

STOPS. Finally, position a pair of stops in each opening so that the drawer bead stands ⅛" proud of the case (detail 'a,' opposite).

▲ The simple, raised bead molding adds depth and detail to the plain drawer fronts while also providing a border for the classic ring pulls.

Fit the Bead Molding

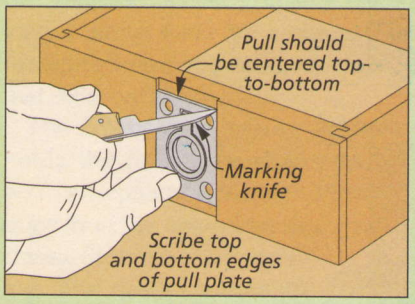

Mark the Rabbets. *With the pull centered top-to-bottom on the front, mark for the width of the rabbets.*

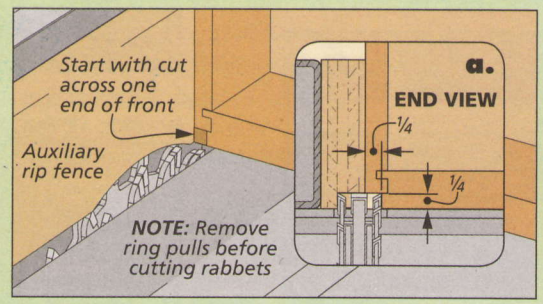

The Cuts. *The rabbets for the bead can be made with a dado blade. Cut across one end, then rotate the drawer counterclockwise for the next cut.*

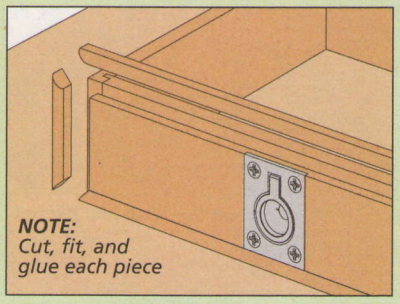

Mitered and Glued. *I mitered one piece to fit and glued it in place before fitting the next piece.*

custom TOOL STORAGE

Woodsmith GO ONLINE EXTRAS

To find plans for custom tool holders for the cabinet, visit our website at Woodsmith.com.

With the drawers in place and the finish applied, your focus can return to the original goal of the project — efficient tool storage. The photo at right shows how I utilized the upper space in the cabinet by mounting custom tool holders to the sturdy false back panel. You most likely have your own thoughts on how to organize this space, but I can offer some ideas. You'll find plans for the tool holders I added on our website.

I started with a rack near the bottom to hold a set of chisels, screwdrivers, and a few other tools. The narrow rack is recessed to provide space in front for hand planes resting on the shelf. I housed all of my most used layout tools — squares, rule, bevel gauge — on a separate panel above. I made a few other tool-specific holders and then added wood dowels to hang hand tools like saws and spokeshaves. W

▲ Custom tool holders allow you to make the best use of the space behind the tambour door. The false back provides a sturdy hanging surface.

Materials, Supplies & Cutting Diagram

A	Case Sides (2)	3/4 x 8 7/8 - 36
B	Case Top (1)	3/4 x 8 - 27 1/4
C	Case Bottom/Dividers (3)	3/4 x 8 5/8 - 27 1/4
D	False Back (1)	3/4 ply. x 27 1/4 - 24 5/8
E	Upper Vert. Dividers (2)	3/4 x 8 5/8 - 2 15/16
F	Lower Vert. Divider (1)	3/4 x 8 5/8 - 3 5/8
G	Tambour Stop Rail (1)	3/4 x 2 3/4 - 27 1/4
H	Case Edging (1)	3/4 x 1/8 - 180 rgh.
I	Bottom (1)	1/2 x 9 1/4 - 28 1/2
J	Top (1)	3/4 x 10 1/4 - 30 1/2
K	Top Cove Molding (1)	3/4 x 3/4 - 54 rgh.
L	Top Bead Molding (1)	1/4 x 3/8 - 54 rgh.
M	Case Back (1)	1/4 ply. - 27 1/2 x 36
N	Hanging Bar (1)	3/4 x 1 - 26 1/2
O	Tambour Slats (40)	3/4 x 1/2 - 27 3/16
P	Connecting Rail (1)	5/16 x 1 - 26 3/8
Q	Lift Rail (1)	3/4 x 2 1/4 - 27 3/16
R	Lift Rail Top Bead (1)	1/4 x 9/16 - 26 3/8
S	Lift Rail Bottom Bead (1)	1/4 x 7/8 - 26 3/8
T	Lower Drwr. Fronts (2)	5/8 x 3 - 12 3/4
U	Lower Drwr. Backs (2)	1/2 x 3 - 12 3/4
V	Lower Drwr. Sides (4)	3/8 x 3 - 8
W	Lower Drwr. Btms. (2)	1/4 ply. - 7 5/8 x 12 3/8
X	Large Upr. Drwr. Front (1)	5/8 x 2 3/8 - 9 7/8
Y	Large Upr. Drwr. Back (1)	1/2 x 2 3/8 - 9 7/8
Z	Large Upr. Drwr. Sides (2)	3/8 x 2 3/8 - 8
AA	Large Upr. Drwr. Btm. (1)	1/4 ply. - 7 5/8 x 9 1/2
BB	Small Upr. Dwr. Fronts (2)	5/8 x 2 3/8 - 7 3/8
CC	Small Upr. Dwr. Backs (2)	1/2 x 2 3/8 - 7 3/8
DD	Small Upper Dwr. Sides (4)	3/8 x 2 3/8 - 8
EE	Small Upper Dwr. Btms. (2)	1/4 ply. - 7 5/8 x 7
FF	Drawer Bead (1)	1/4 x 3/8 - 150 rgh.
GG	Drawer Stop (10)	1/4 x 1/4 - 1

- (3) Small Ring Pulls
- (2) Large Ring Pulls
- (1) Chest Handle
- (24) #8 x 1/2" Fh Woodscrews
- (10) Plastic Stem Bumpers
- (18) #6 x 3/4" Fh Woodscrews
- (1) Artist's Canvas (30" x 36")
- (2) Keyhole Hangers
- (4) #6 x 1" Fh Woodscrews
- (5) #8 x 3/4" Fh Woodscrews
- (5) #8 Finish Washers

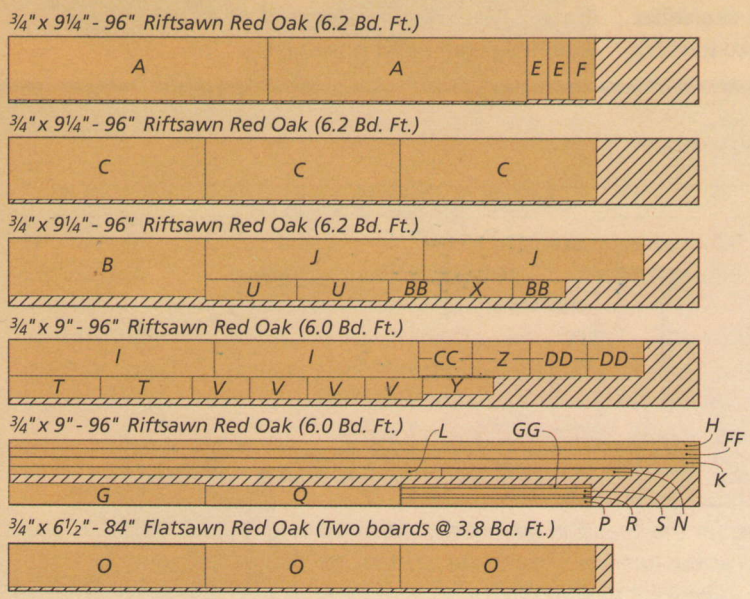

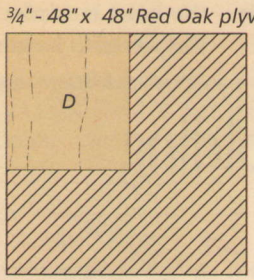

NOTE: All drawer parts planed to correct thickness from 3/4"-thick stock

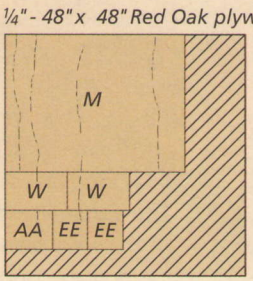

making a Tambour Door

▲ Tambour doors offer convenience as well as a little bit of mystery.

This unique way of enclosing a case is easier to build than you might think.

Most people, woodworkers included, appreciate tambour doors for their curiosity factor. They slide open and seem to disappear into the case. But beyond this unique function, a sliding tambour door is a great space-saving option to a hinged door. The door is completely contained within the case.

TAMBOUR FUNCTION. The most common type of tambour is made with a canvas backing. Narrow slats of wood are glued to a piece of canvas to create a flexible panel. When installed in grooves in the case sides, this flexibility allows it to travel around curves that guide the door into a hidden pocket.

First, I'll discuss a couple of things you need to think about when designing a tambour door. On the following pages, you'll see how easy it is to build one.

A RABBETED TAMBOUR. An initial decision you have to make when settling on a design for a tambour has to do with appearance. The drawings below illustrate this. In many applications, the tambour slats are sized so that their full thickness fits into the groove, as in the left drawing. This works well but has one drawback that I dislike. The grooves are exposed and can be quite noticeable (left details).

I wanted a cleaner look so I used thicker slats and then rabbeted the them to fit the grooves, as shown in the right drawing and details. The rounded faces of the slats stand proud of the groove, effectively hiding it when the door is closed.

ONE WAY BEND. Hiding the groove with thicker, rabbeted slats may affect how the tambour can bend. A tambour made with slats that are fully rounded, as in the left example, can flex in both directions. But if the slats meet with square edges, as those on the tool cabinet in the right drawing, the tambour will only bend backward. This necessitates a wide entry channel at the case back that allows you to feed the tambour into the groove.

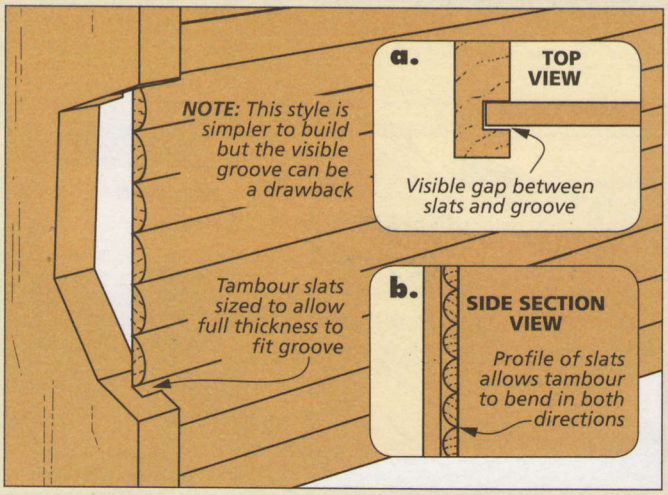

More Flexible. *Thin slats that are fully rounded allow the tambour to bend both backward and forward. But the drawback to this style is that the groove is exposed.*

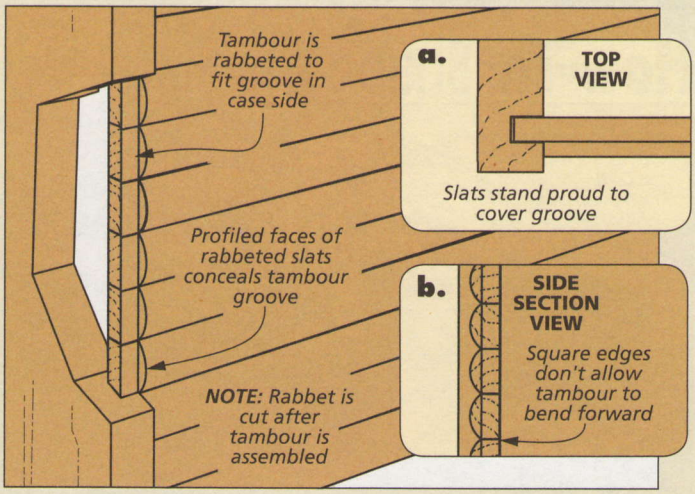

A Hidden Groove. *The profiled faces of the rabbeted slats stand proud of the groove, concealing it. But the square edges of the slats only allow it to bend toward the canvas side.*

building a TAMBOUR

Essentially, building a canvas-backed tambour can be broken down into three stages. First, you'll shape and cut the individual slats that make up the tambour.

Next, you'll assemble the tambour by gluing the slats to the canvas backing. This part is a bit more demanding and finicky. The handy assembly jig you see in the photo at right makes it much easier.

The final stage is simply finishing up a few details such as adding the connecting rail, cutting the rabbets on the ends of the slats, and pre-installing the lift rail.

MAKING THE SLATS

Making the slats just takes a bit of patience. It's a simple repetitive process. You rout a bullnose profile on the edges of a wide blank, then rip the slat from the blank at the table saw. You just repeat this sequence until you have all the slats you need. And at that point, you cut the slats to final length.

HOW MANY? You'll need to have 40 slats ready to assemble the tambour. It doesn't take this many to fill the opening in the case. But I added extra slats to the tambour to act as a counterbalance to the weight of the tambour door as it's opened and closed. It's also a good idea to make more than you'll need so you can pick and choose for the best appearance and straightness.

THE BULLNOSE. I started with a half dozen extra-long, wide blanks (6" to 8") planed to ¾" thick. I jointed the edges to make certain they were smooth and straight. The left drawing in the How-To box below shows the next step. You'll need to rout a bullnose profile on both edges of each blank. The slats are going to be "front and center" on the cabinet, so you want to make sure the profiles are as smooth and chatter-free as possible.

A CONSISTENT THICKNESS. When the bullnose profile is completed on all the blanks, you can take them to table saw to rip the slats free. The key is to make sure the slats come off the saw with a consistent thickness and a smooth cut edge. This will make the assembly go much easier and turn out better.

The right drawing below shows an easy way to achieve this goal. I used a notched push board that registers against the rip fence and automatically sizes each slat. It saves you time and effort.

SAME LENGTH. Once you have enough slats in hand, the next step is to cut them to exactly the same length (27 3/16"). Again, this is important to a trouble-free assembly and smooth operation of the completed door. The trick is to use a stop block clamped to a long auxiliary miter gauge fence.

How-To: Shape the Slats

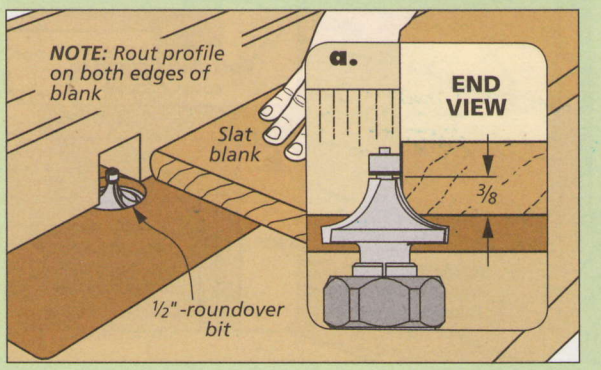

First, a Bullnose. *After jointing both edges of each blank straight and square, I routed smooth, bullnose profiles with two passes across a roundover bit.*

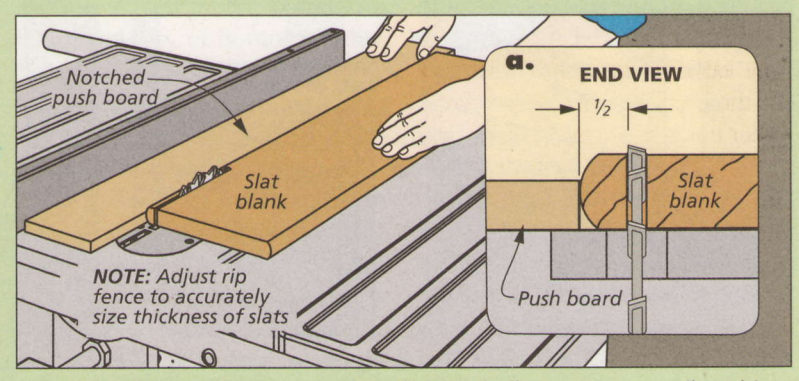

Use a Push Board. *A notched push board allows you to easily achieve a consistent thickness when cutting the slats from the blanks. The push board rides along the fence carrying the blank through the blade.*

ASSEMBLING THE TAMBOUR

You're ready for stage two — the assembly. As I mentioned earlier, one key to making this process go smoothly is to use an assembly jig. The jig keeps all the slats square, aligned, and locked in place while you apply the glue and the canvas.

As you can see in the photo on the previous page, the jig consists of a plywood panel that holds two rabbeted cleats and two stops that trap the slats. Another cleat is used to hold the canvas. You'll find construction details for the jig on page 30. Once it's put together, the assembly can go pretty quickly. The drawings at right take you through the basic steps in the process.

IN THE JIG. The first task is to position all 40 slats in the jig. Starting at the fixed stop, slide the slats under the rabbet in the fixed cleat with the bullnose facing down. When all the slats are in place, snug the removable cleat tightly against the free ends of the slats and screw it down. Then slide the end stop into the jig to force all the slats into firm contact and screw it to the base.

POSITION THE CANVAS. I cut the canvas to a finished width of 24¼", but left it extra long to be trimmed later. Carefully align it over the slats with an even gap (¾") along each side. Then use the canvas cleat to fasten it down to the fixed stop. Now, fold it back to apply the contact cement.

CONTACT CEMENT. The instant bond created by contact cement makes it perfect for gluing the canvas to the slats. But before spreading it on both the slats and the canvas, I masked off the stops and the outside edges of the slats with tape.

APPLYING THE CANVAS. While the contact cement is drying, you'll want to round up an assistant. Applying the canvas is much easier with two sets of hands — one to stretch out the canvas and one to press it to the slats. Starting at the top, press (or roll) the canvas firmly onto the slats, working from the middle toward the edges.

CONNECTING RAIL. The cement bonds instantly. So once you're sure the canvas is firmly adhered, you can take the tambour out of the jig, flip it over, and glue on the thinner and shorter connecting rail. Just make sure you get it centered and tight against the last slat.

THE RABBETS. It works a lot better to wait and cut the end rabbets on the assembled tambour rather than on the individual slats. The tambour is pretty rigid when face down so it was an easy task to simply run the edges across a dado blade, as shown in the bottom left illustration.

PREASSEMBLE. At this point, the tambour is ready to be preassembled to the lift rail. With the two parts aligned face down on the bench, I drilled pilot holes and installed screws through finish washers. Then you can take it apart for assembly in the case. And in pretty short order, you'll have a smooth-sliding tambour door. W

The Assembly

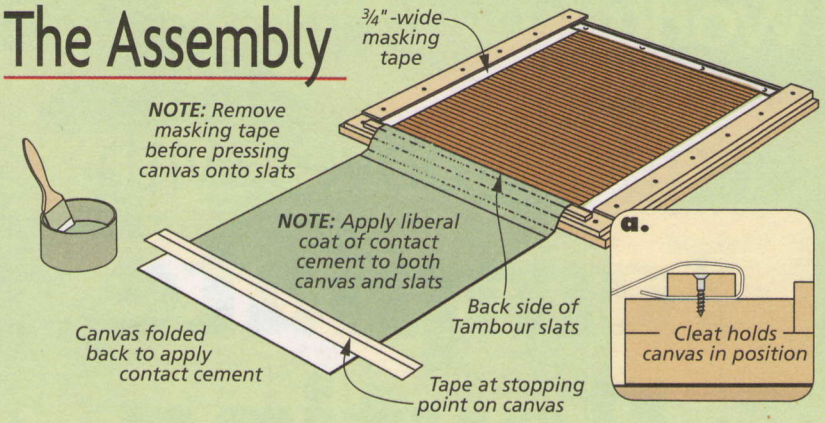

Ready for Glue. *With the slats locked into the jig and the canvas fastened, fold it back to apply contact cement to both the slats and canvas.*

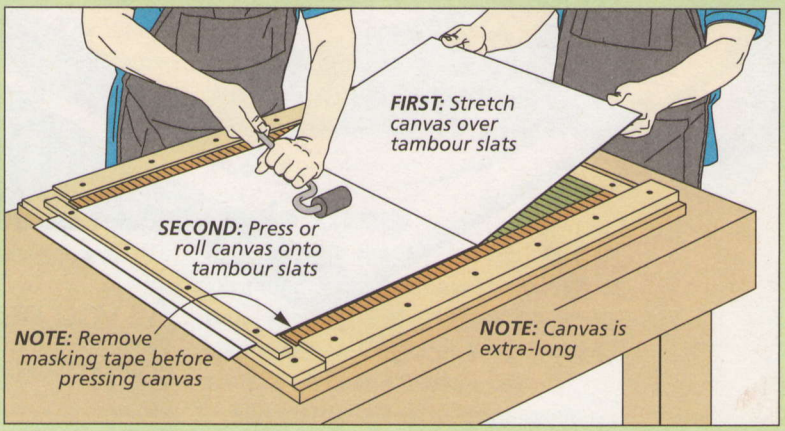

Press the Canvas. *The trick is to have one person stretch the canvas over the jig while the other presses and rolls it into firm contact with the slats.*

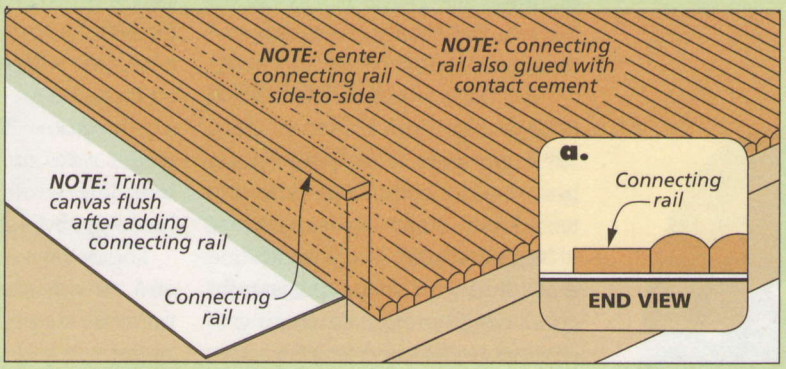

One More Piece. *Take the tambour out of the jig and flip it over to install the connecting rail at the end. Likewise, it's glued with contact cement.*

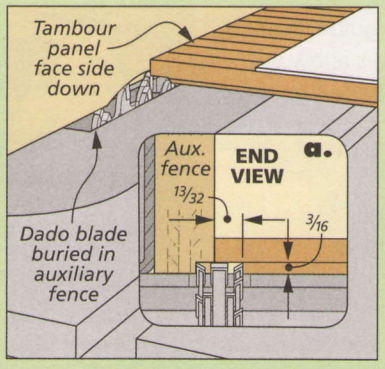

All at Once. *I simply passed the assembled panel over a dado blade to rabbet the ends of the slats.*

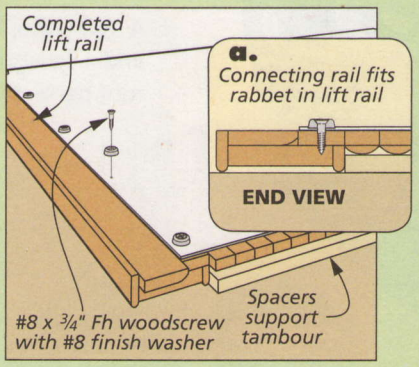

Preassemble. *Fastening the lift rail to the tambour makes the following installation in the case a snap.*

perfect grooves with Template Routing

All you need are a template and a guide bushing for smooth, accurate curved grooves.

Creating an accurate, straight groove is a simple operation. You often have a choice of ways to do the job. But what about a groove that needs to follow precise curves — like the track for the tambour door of the tool cabinet on page 32? In my experience, your option here usually comes down to one technique — template routing.

THE BASIC CONCEPT. For a technique that produces such consistently good results, template routing is easy to understand and execute. The photo above and the drawing below illustrate how it works.

▼ A template, a guide bushing, and a straight bit allow you to rout perfectly shaped grooves.

First, you make a routing template in the shape of the groove you wish to create. Then a guide bushing is installed in the router baseplate with the protruding collar centered on the bit. When routing the groove, the baseplate of the router rides on the surface of the template while the collar of the bushing glides along its edge.

The collar easily follows inside and outside curves to produce a perfectly shaped groove. The technique worked great for the tambour track, but can also be applied in other situations like adding a "juice" groove to a cutting board, or decorative inlays, for example.

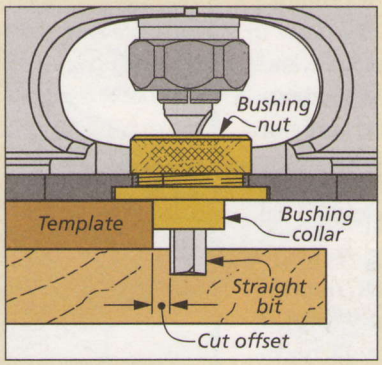

Offset Cut. *A groove routed using a guide bushing will be offset from the edge of the template.*

AN OFFSET TEMPLATE. As you can see, the guide bushing, template, and router bit act in partnership. But there's one important consideration you need to be aware of to get the correct result.

By necessity, the outside diameter of the bushing collar is larger than the cutting diameter of the bit. This creates clearance for the bit to fit through the bushing.

In practice, this means that when the bushing collar follows the edge of the template, the cut made by the bit is offset from the edge of the template. The amount of offset depends on the difference between the cutting radius of the bit and the radius of the collar.

The upshot is that in order to rout a groove of the correct shape, you need to take this offset into account when making the template. This applies to both the straight lines and any curved lines or radii. I'll give you more details when I take you through the step-by-step process of routing the tambour track grooves on the following page.

routing a TAMBOUR TRACK

Before you can rout the mirror-image grooves in the cabinet sides, you'll need to have an accurately sized template. I made mine out of ½" MDF. It's easy to shape and holds a smooth, hard edge.

SIZING THE TEMPLATE. To rout the ⅜"-wide groove, I used a ⅜"-dia. straight bit. I paired this bit with a guide bushing that had a ⅝" outside diameter. This ¼" difference gave me a ⅛" offset between the template and the cut.

Since I would be cutting around the outside, I made the template ⅛" smaller than the final shape of the groove all around. This means that the two upper outside radii should be ⅛" less and the inside radius at the rear ⅛" greater.

But you don't need to worry about figuring this out. All you need to do is make your template to the dimensions shown on the pattern at right. Extra time spent making a precise template will pay dividends. The cut only takes a minute and will only reflect the accuracy of the template.

ATTACHING THE TEMPLATE. Since the two grooves are mirror images, you'll flip the template over between routing the two sides. The template needs to be attached firmly and positioned properly. Clamps will interfere with the travel of the router so I suggest using double-sided tape to attach it. I sized the template so that the lower end would be flush with the end of the side. Then I used a combination square to position it parallel to the front edge of the side (Figure 1).

MAKING THE CUTS. I adjusted the bit to cut the relatively small groove in a single pass. This way, you'll avoid creating a "stepped" groove when you readjust the bit height.

You want to rout around the template in a counterclockwise direction. The cutting action of the bit will pull the rub collar against the template for easier control. This means you'll start the two grooves at opposite ends. For the left side cut, enter through the back rabbet (Figure 2). The right side groove is started with a careful plunge cut in the dado for the upper divider at the front of the case.

A FEW TIPS. Only about half the baseplate of the router is riding on the template. So you'll need to concentrate on the keeping the router flat and avoid tipping it.

At the same time, you need to keep the collar snug to the edge of the template and the router moving steadily. If you feed too slowly or stop, you'll get burning or possibly even a "bump" in the groove. You might want to rout a test groove just to get a good feel for it before working on the actual case sides.

The front section of the groove will be exposed. So when routing both grooves, I positioned the case side with the front edge nearest me. This will give you a little better control and you can more clearly see where to start and stop the cuts along the front.

ENTRY CHANNEL. Once the main groove is routed, the lower rear section needs to be opened up to create a wider entry channel for the tambour (detail 'a' below). To do this, I simply repositioned the template and used it as a guide to nibble away the waste, as in the main drawing below. Then all that's left is a little sanding to clean up the groove. I guarantee that once you try it, template routing will earn a permanent spot on your list of top techniques.

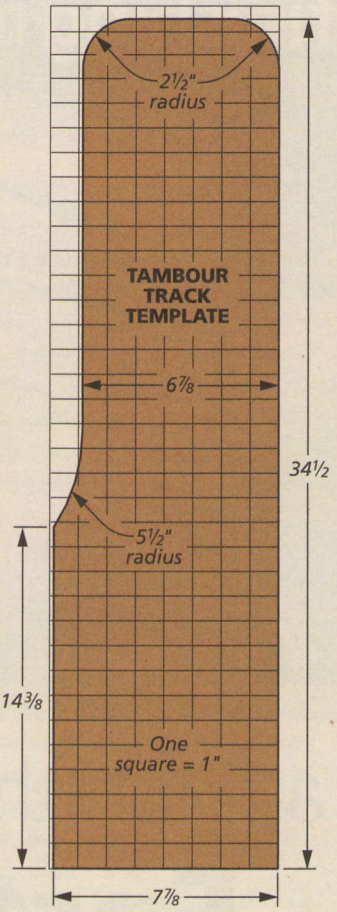

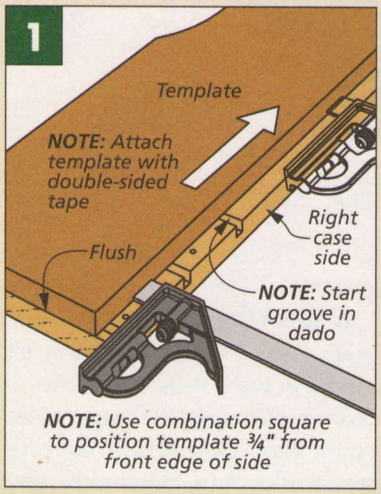

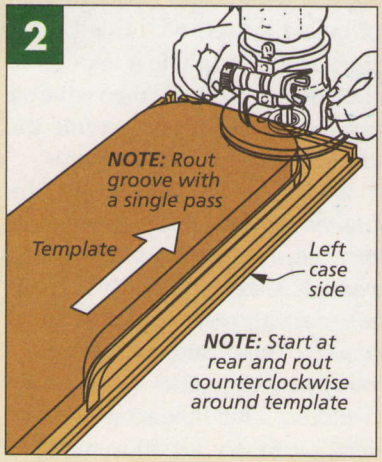

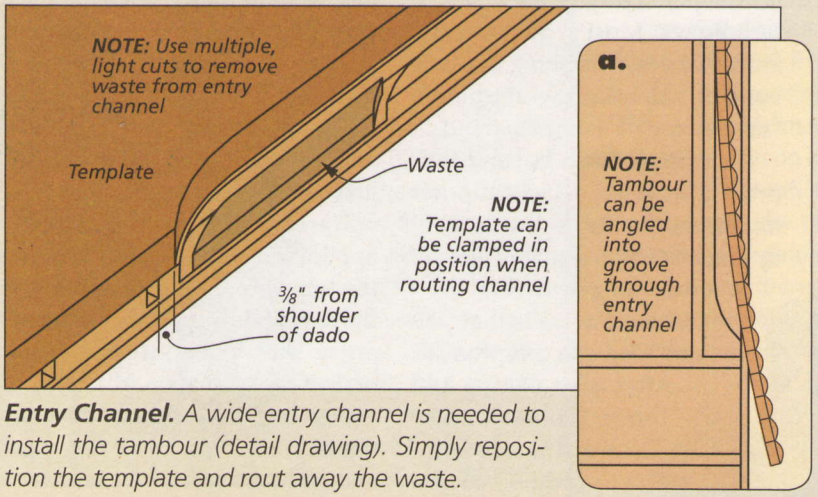

Entry Channel. *A wide entry channel is needed to install the tambour (detail drawing). Simply reposition the template and rout away the waste.*

a finish that's Fast, Easy, and Durable

The simple secret is the three ingredients. Each plays an important role in creating a top-notch finish without a lot of fuss.

Three finishing staples and a few rags will give you a quality finish in short order.

You've more than likely come across recipes for finishes that can be applied quickly and easily, offer guaranteed results, and look great. And there's a good reason for the popularity of these simple techniques. Most woodworkers' attitude toward finishing is a little less than enthusiastic — the phrase "necessary evil" comes to mind.

The catch is that a fast and foolproof finish may lack another important quality — the durability and protection a quality piece of woodworking deserves.

The good news is that you don't have to compromise. After a bit of trial and error, I found an easy way to achieve this additional goal without sacrificing the guaranteed results and no-fuss application.

THREE PARTS. The trick is a three-part, three-step process consisting of linseed oil, shellac, and fast-drying varnish (margin photo). Each ingredient plays a particular role. A linseed oil "toner" imparts a warm color to the wood, the shellac quickly builds a smooth film, and the varnish adds durability and a high level of protection.

The clincher is the easy, no-fuss application. All three parts are simply wiped on in thin coats. Since the drying time is very short, there are no worries about runs, drips, or dust contamination. Your project can go into the finishing room on one day and come out looking great and ready for service the next.

A STEP-BY-STEP LOOK. Now that you've heard the short version, let me fill in the details. The How-To box on the opposite page gives you a good look at how the process works. As I mentioned, you start by wiping on a very light coat of boiled linseed oil. I don't flood the surface. Apply just enough to darken the wood and then wipe off any excess. Be sure to get into the corners and cover all the edges.

When applied sparingly, the linseed oil will simply cure under the following coats of shellac and varnish. I like the way it brings out a beautiful, warm color in most woods. The change is immediate and pretty dramatic.

SHELLAC. After allowing the linseed oil to dry for 30 minutes or

so, next comes multiple coats of thinned shellac. The advantage to shellac is that it dries within minutes, allowing you to wipe on the coats in quick succession.

I use a 3-lb. cut shellac diluted one-to-one with denatured alcohol (right photo). This runny mix goes on easily and lays out smoothly.

If you plan to topcoat the shellac with a fast-drying polyurethane varnish, you'll want to first test its compatibility with the shellac. The wax in shellac can sometimes cause drying or adhesion problems. An easy way to avoid this is to de-wax the shellac. Pour some into a jar and let it sit for several days. The wax will start to settle out and the pure shellac can then be poured off.

▲ Fine, white sanding dust tells you the shellac is dry enough to topcoat with varnish.

PADDING. The technique used to wipe on shellac (called padding) is easy to master. Take a soft, lint free cloth and fold over the edges to create a flat pad about 2" square. Dip the pad into the shellac until it's saturated. Wipe it on as if you were brushing — with long strokes. Overlap each stroke until the surface is covered. The thin shellac will level well. Since you're going to apply multiple coats, you don't need to be too fussy.

Often, by the time you've completed one coat, you can start the next. Keep adding coats and you'll begin to notice a glossy build. I don't bother to sand between coats. You can wipe on about three coats and then give the shellac a chance to cure thoroughly (about one hour) before applying several more.

After this second round, take another break to let the shellac cure. An hour later you can sand lightly with 320-grit or finer sandpaper in preparation for the varnish topcoats (photo at left).

FAST-DRYING VARNISH. Varnish can be formulated with different solvents to speed the drying time. This feature is further enhanced by thinning the varnish to "wiping" consistency. Depending on the brand you use, the recoat time can be reduced to as little as two hours.

I like to use a satin or semi-gloss varnish. You'll end up with a more consistent sheen. Just pour the varnish into a jar and add an equal volume of mineral spirits.

The varnish topcoat is applied similarly to the shellac — with a bit more care. Use a soft pad to wipe on a light wet coat. If necessary, you can "work" the varnish for a few minutes to even out the coverage. Then simply let it sit.

You can stop here, or for more protection, you can add a second coat once the varnish has dried sufficiently. Just sand lightly and then repeat the process.

STEEL WOOL. I let the finish cure overnight and then buff the surface with #0000 steel wool (main photo, opposite page). And for the modest amount of work, the results are pretty hard to beat. W

▲ A 3-lb. cut of shellac diluted one-to-one with alcohol will wipe on easily and lay out smoothly.

How-To: Three Easy Steps to a Great Finish

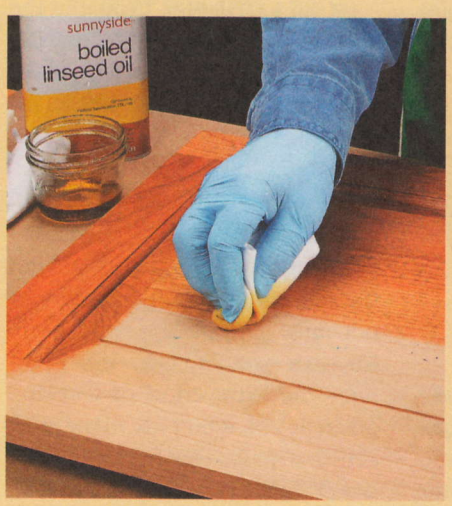

▲ An initial coat of boiled linseed oil adds warmth and depth of color to the wood. Apply it sparingly.

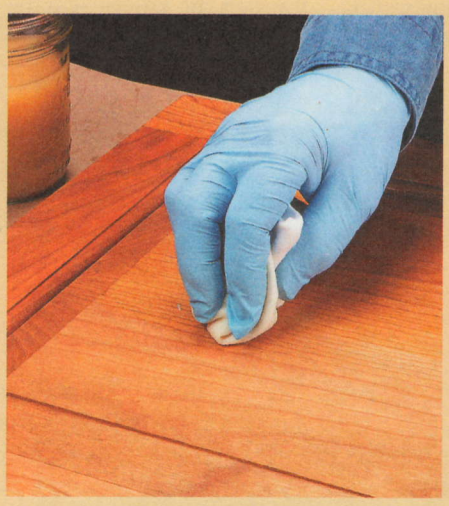

▲ Next, I pad on multiple, thin coats of shellac in quick succession. This starts to build a smooth film.

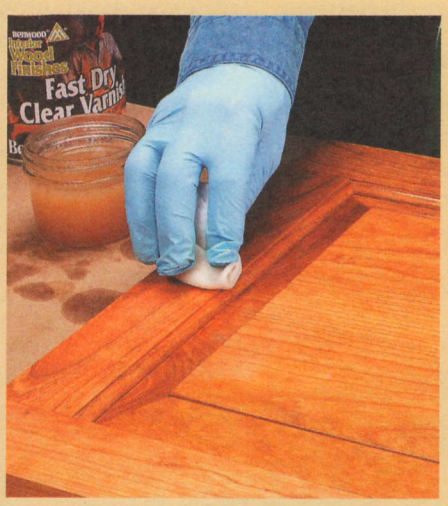

▲ A final layer of varnish adds more protection and durability. Wipe on a wet, even coat and let it dry.

working with Figured Woods

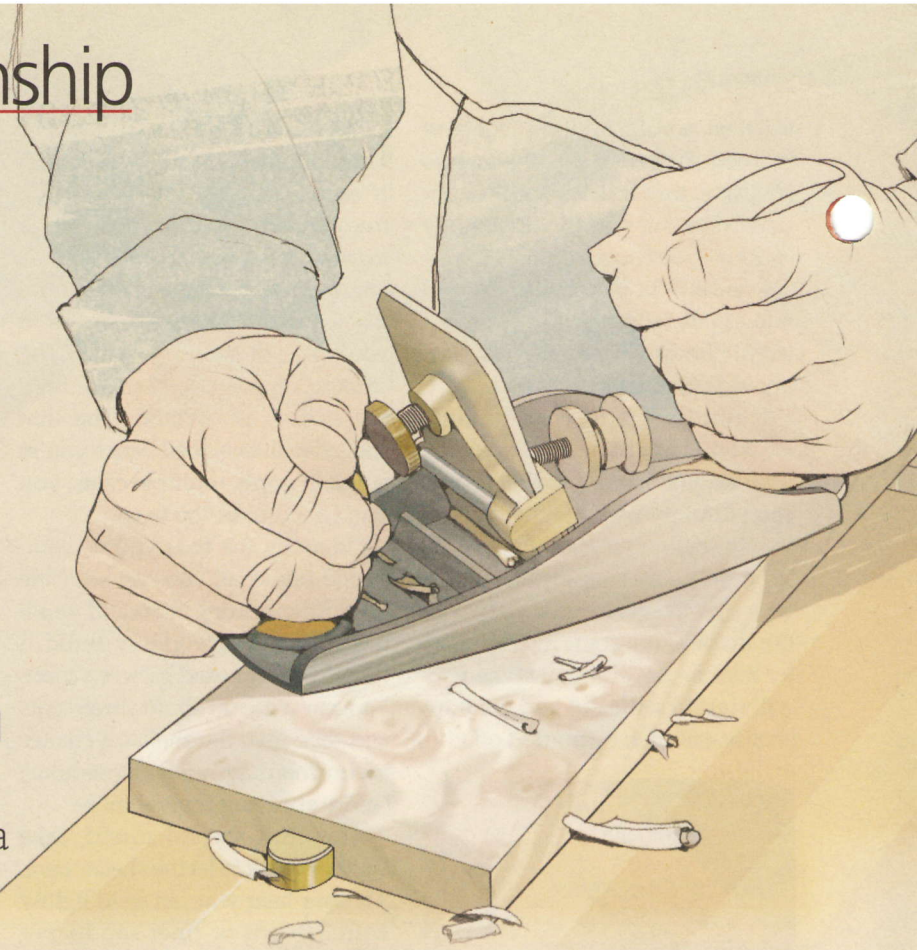

The eye-catching look of figured wood can really spice up a project. All it takes is a little extra effort and the right techniques.

It's tough to beat the look and workability of the classic American hardwoods like oak, maple, cherry, walnut, and others. And most experienced woodworkers quickly learn the ins and outs of how to cut, plane, and sand these woods for the best finished appearance.

But each of these species can also be found with unusual figure. Sometimes it's just the result of where the board came from in the tree. Crotch wood is a good example. Other woods reveal interesting patterns depending on how the log is sawn, like the beautiful medullary rays of quartersawn oak.

For these woods, the difficulty usually comes when surfacing and thicknessing the stock. In birdseye blanks, the small knots that form the eyes are prone to tearing out under a planer or jointer knife. You'll also often see tearout in a curly or quilted workpiece. The curly grain, which changes direction with every inch, will inevitably be going the wrong direction through the knives at some point. The swirling grain in crotch wood presents the same challenge. You can see examples of each of these problems in the photo at left.

SOLUTIONS. There's no single solution for dealing with the problems associated with working figured woods. That's mostly because each board can present a unique challenge. However, there are a few techniques that can get you going. You'll usually find you can solve most of the problems using these approaches and a little patience.

LAY OUT & EXPERIMENT. Probably the best way to start is by laying out the parts you need. Normally, I like to plane all the wood for a project before cutting parts to length. But when using figured woods, this isn't the best approach. Instead, lay out each of the figured workpieces and cut them to rough size. This way, you not only identify the right grain for each part, but you also minimize the extra effort of working on areas you won't use in the project. You'll also want to determine which side of a workpiece will be visible in the finished piece.

With the good face of each piece identified, try jointing or planing

▼ Curly, spalted, birdseye, and crotch woods display striking grain patterns.

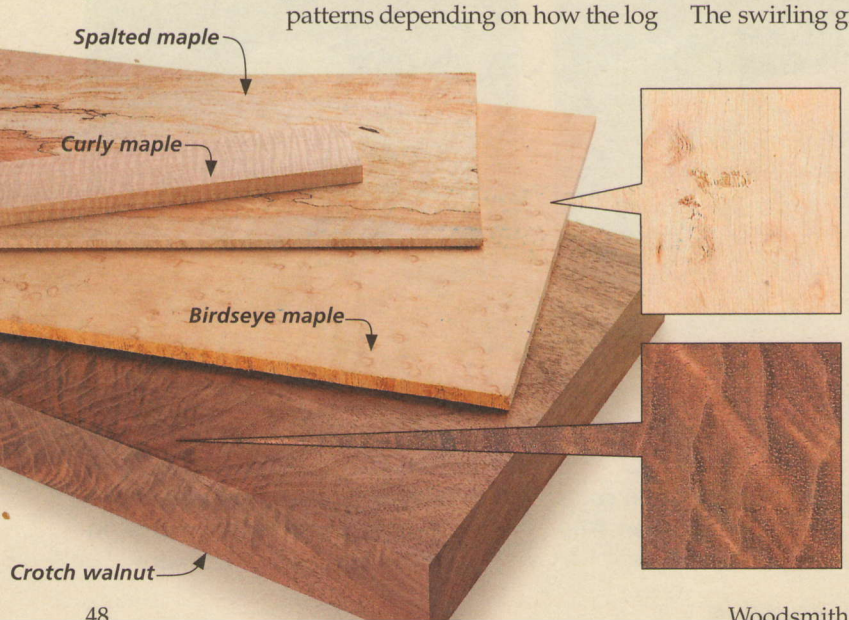

◄ Tearout can be a problem with any highly figured wood.

◄ Crotch wood grain changes directions and makes planing a problem.

the opposite face to see how the wood will react. Sometimes you can get a good result by slowing the feed rate. You can also try a light mist of water on the surface to soften the fibers temporarily while you run it through a planer.

HAND PLANES. If your power tools don't give you the results you're looking for, then it's time to turn to hand tools. I find that a good smoothing plane (with a freshly sharpened iron) is often the answer. The nice thing about this approach is that you can change the direction of the cut to match the changes in grain direction. Set it to take the finest shaving you can and give it a try, again using the back face of the workpiece to make your test cuts.

SCRAPER PLANE. If a smoother still leaves tearout, you can try a scraper plane (Figure 1). The high angle this blade presents to the workpiece is often the key to smoothing these woods. If the workpiece is really stubborn, you might try resharpening the iron without burnishing a hook on the edge.

HAND SCRAPER. In addition to smoothing the surface, a hand scraper can be the best way to bring out the beauty in a figured workpiece. Unlike the scraper plane, you'll want to burnish a fresh hook on the edge of a hand scraper before getting started. You can vary the angle of the hand scraper to get the best results (Figure 2). It's also sometimes helpful to change the direction of your stroke to find the best approach.

SANDING. Unfortunately, there are some workpieces that simply can't be worked with any of these tools. In these cases, you'll have to break out the sanders and get started. A random-orbit sander is great for the initial smoothing out of the rough spots, but I like to finish up with a sanding block (Figure 3) for the finest surface. This way, you can follow the grain on a stubborn workpiece.

Although they can be tough to work, the good news is that the spectacular look of figured wood more than justifies the effort. W

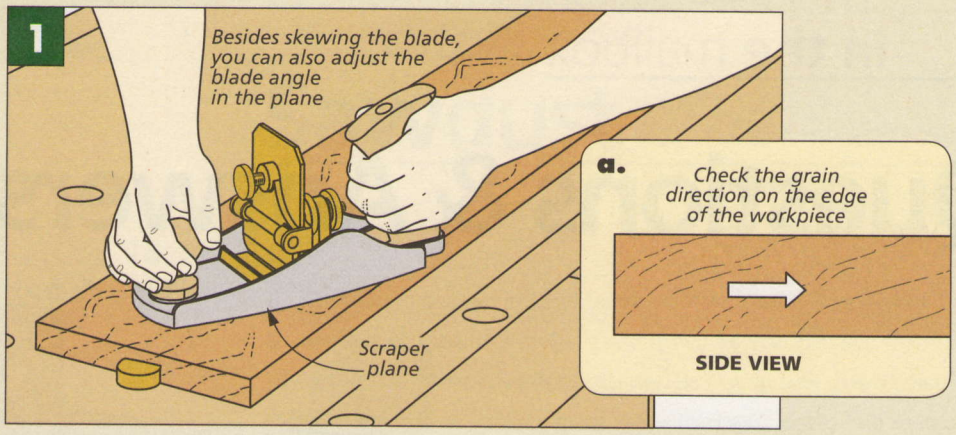

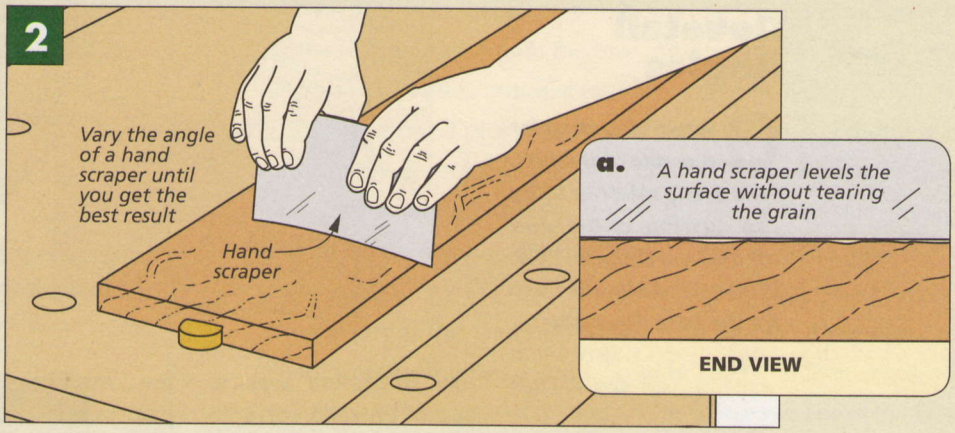

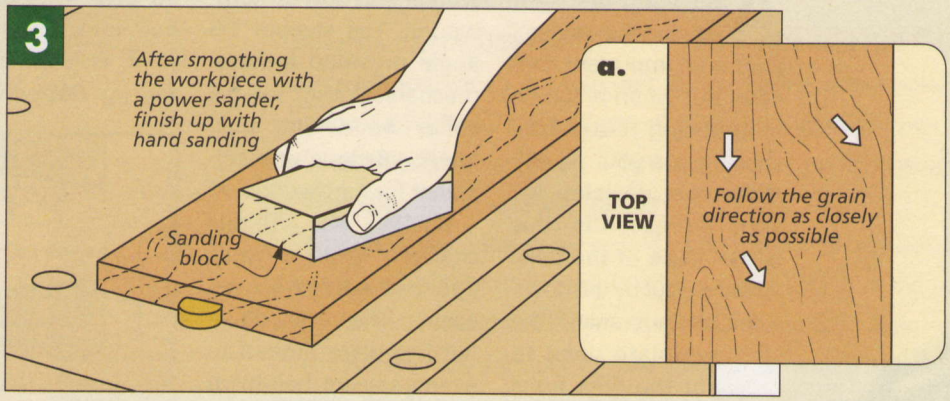

Shop Safety: Spalted Wood

Although most figured woods are prized for their grain there's one other type often used in fine furniture — spalted wood. Spalting is simply a discoloring of some of the grain due to fungal growth. And while this discolored pattern can make an attractive workpiece (especially when resawn and bookmatched) the spores can cause breathing problems for some woodworkers. To be on the safe side, wear a dust mask whenever you sand or work with spalted woods.

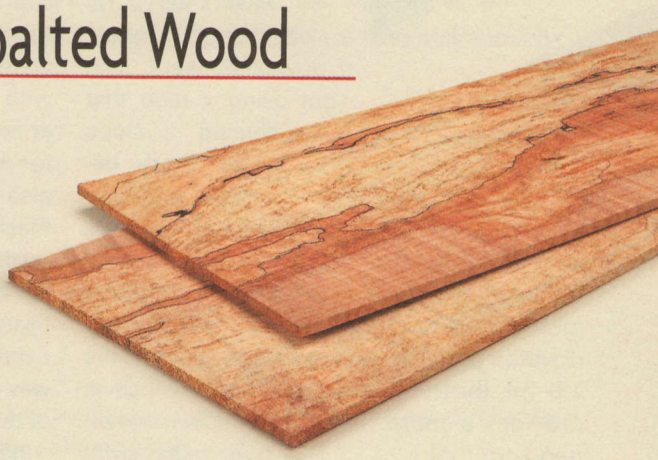

▲ The result of a fungus, spalted wood can sometimes provoke an allergic reaction.

Questions & Answers

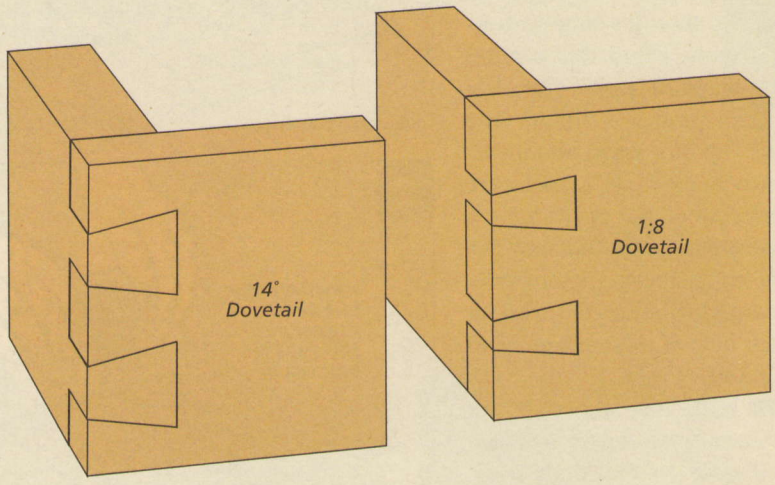

Dovetail Angles

Q ***When shopping for dovetail router bits, I see some referred to by the cutting angle and others by a ratio, like 1:8. Which kind should I use for the best dovetails?***

Steve Dunn
Vernal, Utah

A Selecting the right angle for a dovetail joint is an important concern. But when it comes to choosing router bits, chances are your jig will make that decision for you. The reason for this is the angle of the tails, which are cut by the dovetail bit, must match the template used to cut the pins for a perfect-fitting joint.

ANGLES & SLOPES. Traditionally, hand-cut dovetails were laid out using a ratio that defined a slope angle. That's because precision measuring tools weren't commonly available, but craftsmen could easily measure a slope to define the angles. The drawings at right show how it works.

The two most commonly used slopes were roughly 1:6 and 1:8. For hand-cut dovetails, a rule of thumb was to use a 1:6 ratio for softwoods and 1:8 for hardwoods. The steeper 1:6 angle provided a better mechanical joint for the softer wood. The shallower 1:8 slope was sufficient for hardwoods.

DOVETAIL JIGS. Things changed when dovetail jigs first arrived on the scene. The first dovetail jigs were limited to evenly spaced, half-blind dovetails with equally sized pins and tails. Many of these early jigs were designed to work with a 14° bit. This steeper angle certainly makes for a strong joint. But it also brands the joint as machine cut.

INNOVATIONS. As dovetail jigs became more sophisticated, companies like *Leigh* worked to create a way to vary the spacing of the pins and tails.

THE LOOK. But even with this innovation in dovetail jigs, the assembled dovetails still displayed the machine-cut look, just spaced differently. To give a more "hand-cut" look to the finished joint, at least one dovetail jig (*WoodRat*) uses bits that more closely match the slope of hand-cut dovetails. Which is why you may find bits designated by slope ratio as well as angles. W

▲ A 14° dovetail bit (top) is commonly used with dovetail jigs. The 1:8 bit (bottom) provides a more hand-cut look.

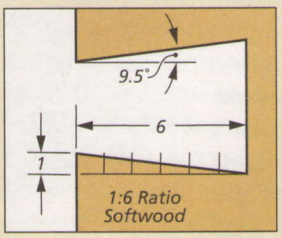

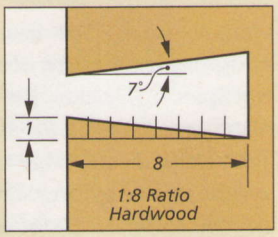

Common hand-cut dovetail slope ratios and their corresponding angles	
	1:9 = 6.5°
	1:8 = 7°
	1:7 = 8°
	1:6 = 9.5°

Do you have any questions for us?

If you have a question related to woodworking techniques, tools, finishing, hardware, or accessories, we'd like to hear from you.

Just write down your question and mail it to us: Woodsmith Q&A, 2200 Grand Avenue, Des Moines, Iowa 50312. Or you can email us the question at: woodsmith@woodsmith.com.

Please include your full name, address, and daytime telephone number in case we have questions.

Sources

SPECIALTY CLAMPS

Most of the specialty clamps (or similar versions) on page 8 can be found through many of the sources shown in the margin at right. The wooden cam clamps are a little harder to find. They're available from *Japan Woodworker* (26.100.850) and *The Best Things*.

ROUTER TABLE DUST COLLECTION

Adding dust collection is a great upgrade for your router table. *Rockler* carries the universal dust port (92031), *Down Under Dust Port* (25893), and *Dust Bucket* (32321). The *Free-Hand Guard* is available from *Woodpeckers*.

HONING GUIDES

Any of the honing guides shown on page 12 will make sharpening a lot easier. The *General* and *Stanley* guides are available from *Amazon*. The *Kell, Veritas, Veritas Mk. II, Oar,* and *Eclipse*-style guides are available from several of the woodworking sources shown in the margin at right.

A few of the guides aren't as readily available. The *Alisam Sharpening Sled* can be purchased from *Alisam Engineering*. *Woodcraft* carries the *Pinnacle*. And the *Sharp Skate 2* is available through *HMS Enterprises*.

MAIL ORGANIZER

Aside from a few wire brads, the only other item required to build the mail organizer is a standard keyhole hanger. We purchased this from *Rockler* (28837).

To even out the color of the cherry, we stained the project with a combination of three parts *Zar* cherry stain and one part *WoodKote Jel'd Stain* (*Cherry*). Then the project was sprayed with a couple coats of lacquer.

TRIVET CENTERPIECE

There's no hardware or special items used to build the trivet on page 20. But when it comes to finishing this project, you'll want to select a finish that can stand up to the heat from hot dishes placed upon it. I simply applied a couple coats of an oil finish — *General Finishes' Seal-a-Cell*.

STORAGE BENCH

The two-tier storage bench requires a handful of hardware items. *Rockler* carries the hinges (55902), knob (22735), and drawer pull (38677). The bun feet (465-BF) and the dowel screws (ADDS) were purchased from *Classic Designs by Matthew Burak*.

To finish the bench, we painted it with a couple of coats of *Benjamin Moore* paint (*Montgomery White*). Then to give the bench an aged look, we applied a coat of *Behlen's Glazing Stain* (*VanDyke Brown*).

TOOL CABINET

There are only a few hardware items in the tool cabinet on page 32. The small ring pulls (00S30.21), large ring pulls (00S30.22), and chest handle (00S30.23) are all available from *Lee Valley*.

You'll also need some plastic stem bumpers (28373) and a pair of keyhole hangers (28837). We purchased these from *Rockler*.

The tambour door requires some canvas for the backing. We purchased a piece of artist's canvas from a local art store.

To maintain the natural color of the wood, we didn't stain the tool cabinet. Instead, we wiped on a coat of *General Finishes' Seal-a-Cell* to give the oak a warmer color and then sprayed on a couple coats of lacquer. W

Online Customer Service

Click on *Magazine Customer Service* at **www.woodsmith.com**

- Access your account status
- Change your mailing or email address
- Pay your bill
- Renew your subscription
- Tell us if you've missed an issue
- Find out if your payment has been received

MAIL ORDER SOURCES

Project supplies may be ordered from the following companies:

Woodsmith Store
800-444-7527
Benjamin Moore Paints, General Finishes' Products, Honing Guides, Specialty Clamps

Alisam Engineering
585-624-2280
alisam.com
Alisam Sharpening Sled

Amazon.com
Honing Guides

Classic Designs by Matthew Burak
800-748-3480
tablelegs.com
Bun Feet, Dowel Screws

HMS Enterprises
877-692-3624
getsharper.com
Sharp Skate 2

Japan Woodworker
800-537-7820
japanwoodworker.com
Cam Clamps, Honing Guides

Lee Valley
800-871-8158
leevalley.com
Chest Handle, Ring Pulls, Specialty Clamps, Veritas Honing Guides

Rockler
800-279-4441
rockler.com
Keyhole Hangers, Router Table Dust Collection, Specialty Clamps, Stem Bumpers, Storage Bench Hardware

The Best Things
800-884-1373
thebestthings.com
Cam Clamps

Woodcraft
800-225-1153
woodcraft.com
Pinnacle Honing Guide, Specialty Clamps

Woodpeckers
800-752-0725
woodpeck.com
Free-Hand Guard

Keep It All Organized !

Woodsmith Binders

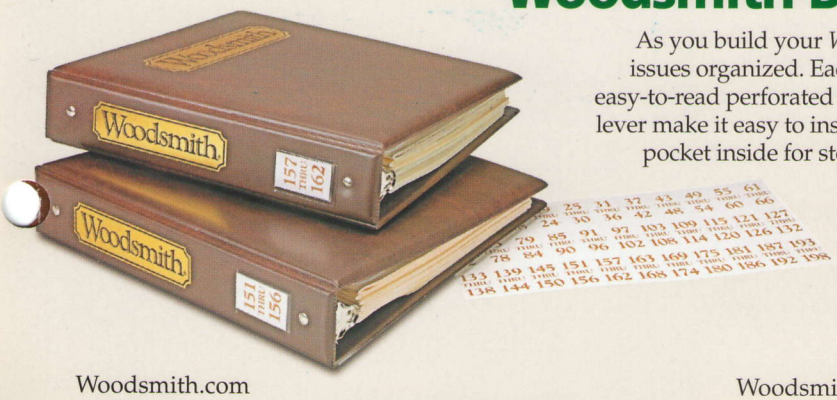

As you build your *Woodsmith* library, here's a way to keep your issues organized. Each binder features durable vinyl covers and easy-to-read perforated number tags. Snap rings with a quick-open lever make it easy to insert and remove issues. And there's an extra pocket inside for storing notes. Each binder holds a full year (6 issues) of *Woodsmith*.

Visit **Woodsmith.com** to order or call **1-800-444-7527**.

***Woodsmith* Binder**

❍ **WB** (*Holds 6 issues*).....$12.95

looking inside
Final Details

▲ *Trivet Centerpiece.* In addition to its attractive appearance, you'll also appreciate the interesting technique used to build this trivet. Learn more on page 20.

▲ *Two-Tier Storage Bench.* This compact bench offers convenient storage as well as seating. Pocket screws and basic joinery make it straightforward to build. Plans begin on page 22.

▼ *Tambour Tool Cabinet.* The tambour door is the focal point of this tool cabinet. But don't overlook the other details — beaded drawer fronts, recessed ring pulls, and custom tool holders. It all starts on page 32.